Installation, use and maintenance instructions
安装，使用和维修说明书

RIELLO

GB

Forced draught gas burners

CN

强制通风燃气燃烧器

Two stage progressive or modulating operation
平滑两段火或机械比例调节

Gulliver

CODE - 编码	MODEL - 型号	TYPE - 类型
20024432	BS2/M	916M
20023783	BS3/M	917M
20024434	BS4/M	918M

20023735 (1) - 06/2010

INDEX

1. BURNER DESCRIPTION

Gas burner with two stage progressive or modulating operation.

- ➤ Burner according to directives: EMC 89/336/EEC - 2004/108/EC, Low Voltage 73/23/EEC - 2006/95/EC, Machines 98/37/EEC - 2006/42/EC.
- ➤ The burner is approved for intermittent operation as per Directive EN 676.
- ➤ The burner meets protection level of IP X0D (IP 40), EN 60529.
- ➤ Gas train according to EN 676.

Fig. 1

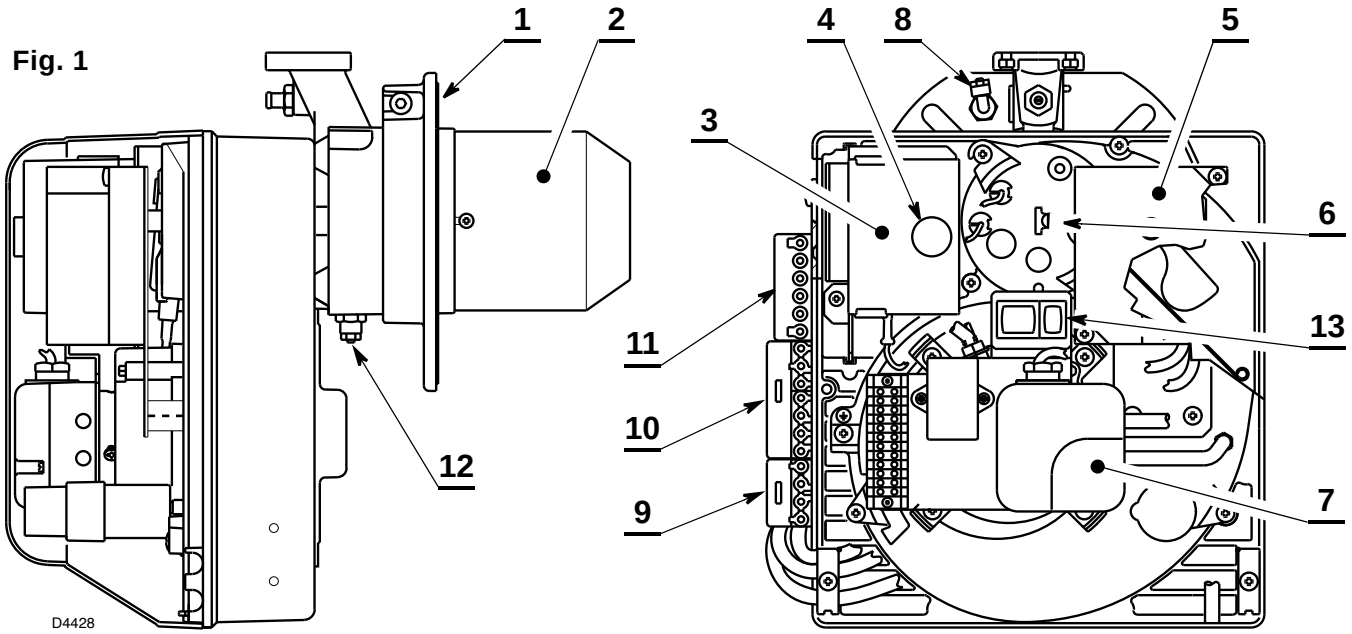

1 – Flange with insulating gasket
2 – Blast tube
3 – Control box
4 – Reset button with lock-out lamp
5 – Air damper adjustment assembly
6 – Combustion head setting screw
7 – Air pressure switch
8 – Air pressure test point in combustion chamber (to be connected to gas valve assembly)
9 – 4 pole socket for 2nd stage / modulating connection
10 – 7 pole socket for burner supply
11 – 6 pole socket for gas train
12 – Air pressure test point (to be connected to gas valve assembly)
13 – Operating mode switches for: automatic / manual mode (AUT / MAN) increase / decrease output (+/-)

1.1 BURNER EQUIPMENT

Flange with insulating gasket . . . . . No. 1
Screws and nuts for flange to be fixed to boiler . . No. 4
Screw and nut for flange . . . . . No. 1
Blue plastic tube . . . . . No. 1
G1/8 union elbow . . . . . .No. 1
4 pin plug . . . . . .No. 1
7 pin plug . . . . . .No. 1

1.2 ACCESSORIES (optional):

- **KIT (PC INTERFACE KIT):** cod. **3002719**
- **OUTPUT POWER REGULATOR KIT**

Under modulating operation, the burner automatically adapts to one of an infinite number of firing rates between the low and high flame output position, thus ensuring stable operating conditions in terms of temperature or pressure. Two components should be ordered
– Power regulator to install to the burner; – Probe to install to the boiler.

PARAMETER TO BE REGULATED	PROBE			REGULATOR	
	Range	Type	Code	Type	Code
Temperature	– 100...+ 500 °C	PT 100	3010110	RWF40	3001078
Pressure	0...2.5 bar	Output probe 4...20 mA	3010213		
	0...16 bar	Output probe 4...20 mA	3010214		

2. TECHNICAL DATA

2.1 TECHNICAL DATA

TYPE		916M	917M	918M
Thermal power **(1)**	kW	26/49 – 91	48/79 – 195	68/140 – 250
	Mcal/h	22.4/42.1 – 78.2	41.3/67.9 – 167.7	58.5/120.4 – 215
Natural gas **(Family 2)**		Net heat value: 8 – 12 kWh/Nm^3 = 7000 – 10.340 kcal/Nm^3		
		Pressure: min. 20 mbar – max. 36 mbar		
Electrical supply		Single phase, 230V ± 10% ~ 50Hz		
Motor		Run current 0.8 A 2800 rpm 293 rad/s	Run current 1.8 A 2800 rpm 293 rad/s	Run current 1.9 A 2800 rpm 293 rad/s
Capacitor		4 μF	6.3 μF	8 μF
Ignition transformer		Primary 230V – 45 VA Secondary 1 x 15 kV – 25 mA		
Absorbed electrical power		0.18 kW	0.35 kW	0.53 kW
(1) Reference conditions: Temperature 15°C - Barometric pressure 1013 mbar – Altitude 0 m above sea level				

For gas family 3 (LPG) ask for separate kit.

COUNTRY			AT - CH - IS	GB - IE - IT	DE	FR	NL	BE	LU
GAS CATEGORY			$II_{2H3B/P}$	II_{2H3}	$II_{2ELL3B/P}$	II_{2Er3P}	$II_{2L3B/P}$	$I_{2E(R)B}/I_3$	$II_{2E3B/P}$
GAS PRESSURE	G20	H	20	20	–	–	–	–	20
	G25	L	–	–	20	–	25	–	–
	G20	E	–	–	20	20/25	–	20/25	–

2.2 OVERALL DIMENSIONS

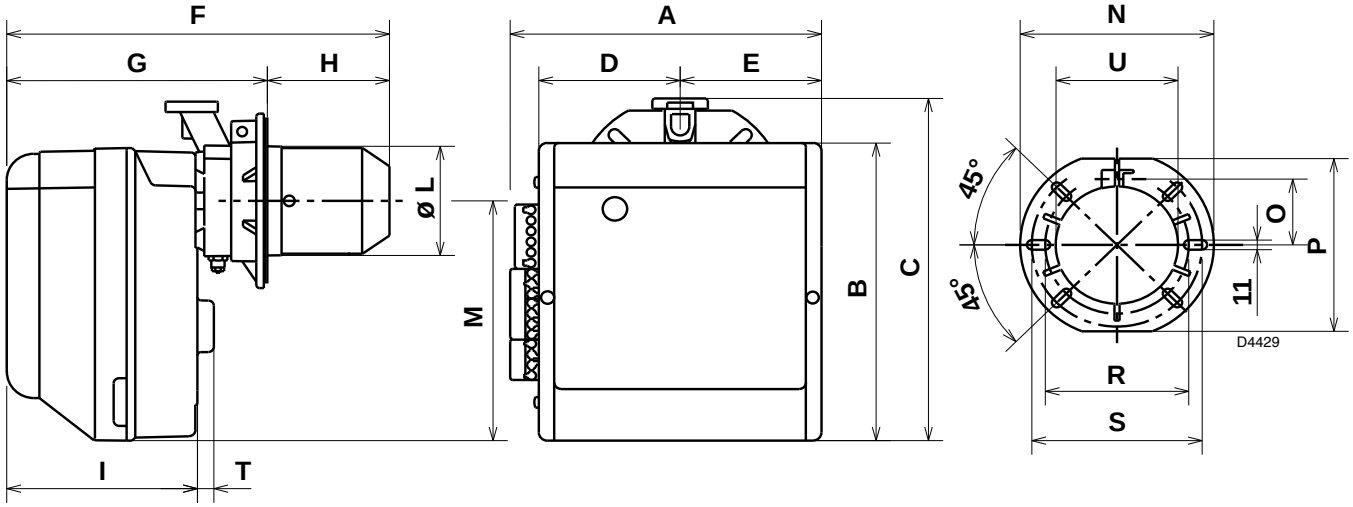

TYPE	A	B	C	D	E	F	G	H	I	L - U	M	N	O	P	R	S	T
916M	285	280	325	125.5	125.5	352	238 – 252	114 – 100	174	106	230	192	66	167	140	170	18
917M	330	345	391	150	150	390	262 – 280	128 – 110	196	129	285	216	76.5	201	160	190	21
918M	330	345	392	150	150	446	278 – 301	168 – 145	212	137	286	218	80.5	203	170	200	21

2.3 FIRING RATES

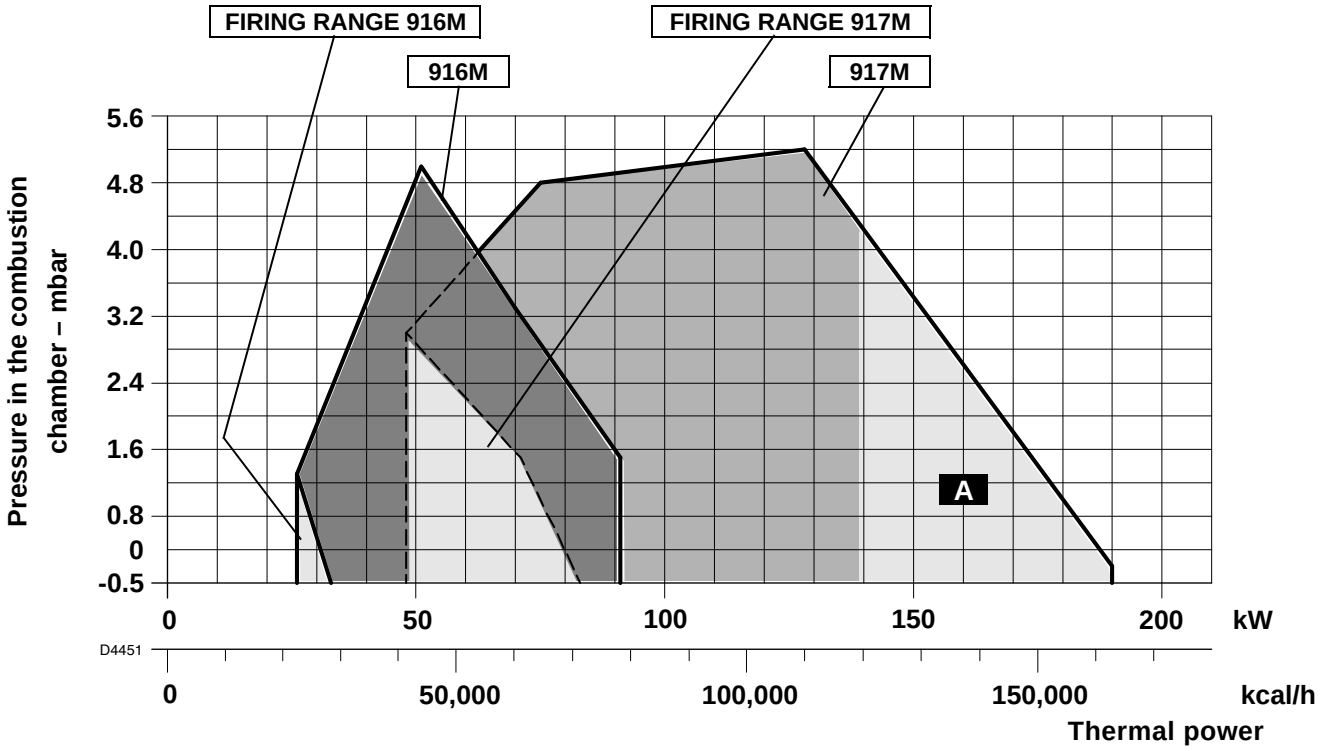

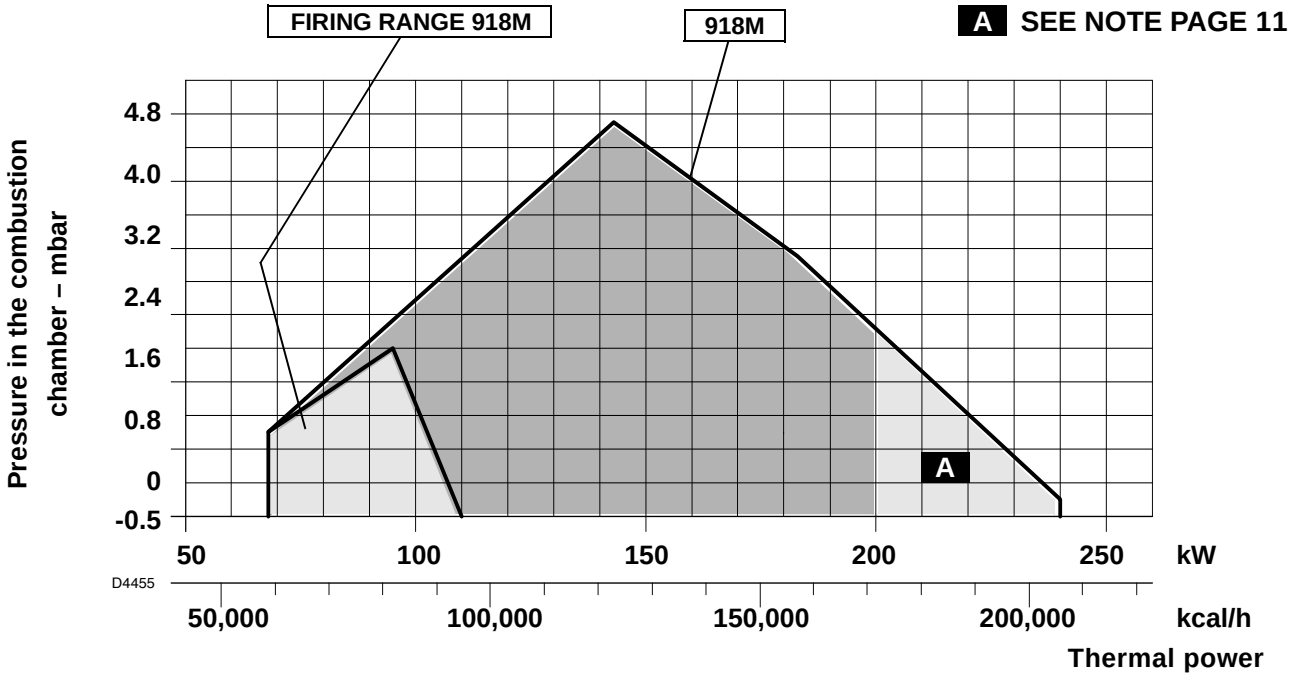

ATTENTION

For the burner to work properly, starting must always occur within the relevant firing range (see table on page 12).

TEST BOILER

The firing rate has been defined according to EN 676 standard.

COMMERCIAL BOILERS

The burner-boiler matching is assured if the boiler conforms to EN 303 and the combustion chamber dimensions are similar to those shown in the diagram EN 676. For applications where the boiler does not conform to EN 303, or where the combustion chamber is much smaller than the dimensions given in EN 676, please consult the manufacturers.

CORRELATION BETWEEN GAS PRESSURE AND BURNER OUTPUT

To obtain maximum output, you will need a pressure of 9.3 mbar, for model 916M, measured at the head (**M2**, see chapter 4.3, page 7) with the combustion chamber at 0 mbar and using gas G20 with a net heat value of 9,45 kWh/m^3 (8.127 kcal/m^3).

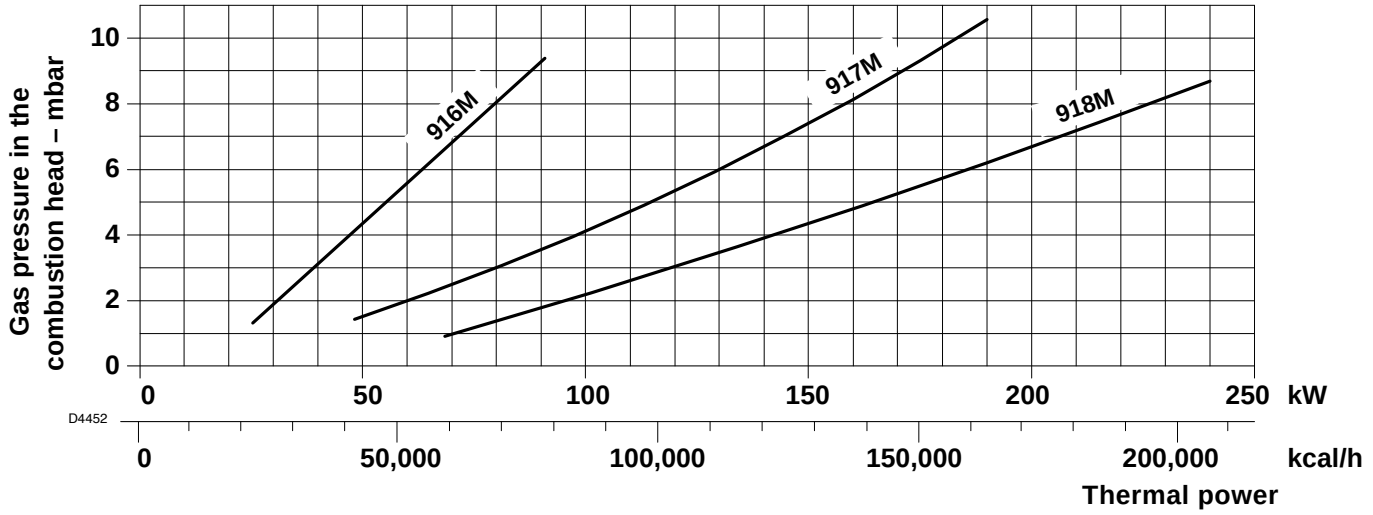

3. INSTALLATION

THE BURNER MUST BE INSTALLED IN CONFORMITY WITH LEGISLATION AND LOCAL STANDARDS.

3.1 BOILER FIXING

- ➤ Widen, if necessary, the insulating gasket holes (3, fig. 3), taking care not to damage them.
- ➤ Fit the pressure point (7) supplied with the burner to the flange (5).
- ➤ Fix the flange (5) to the boiler door (1) using four screws (4) and (if necessary) the nuts (2) **interposing the insulating gasket (3)** but keep unloosing one of the two upper screws (4) (see fig. 2).
- ➤ Put on the flange (5) the burner combustion head, tighten the flange with the screws (6) and lock the loose screw (4).
- ➤ Check that pressure point (7) can measure the chamber pressure through the insulating gasket accurately. If the signal is not clear, fit the pressure point directly to the combustion chamber (for instance through the inspection window pipe, if available). Failure to connect to an efficient pressure point in the combustion chamber can result in poor firing and unsafe operation.

ATTENTION: The burner can be fixed with the variable dimension **(A)** (see fig. 4).
Anyway, make sure that the combustion head crosses completely the boiler door thickness.

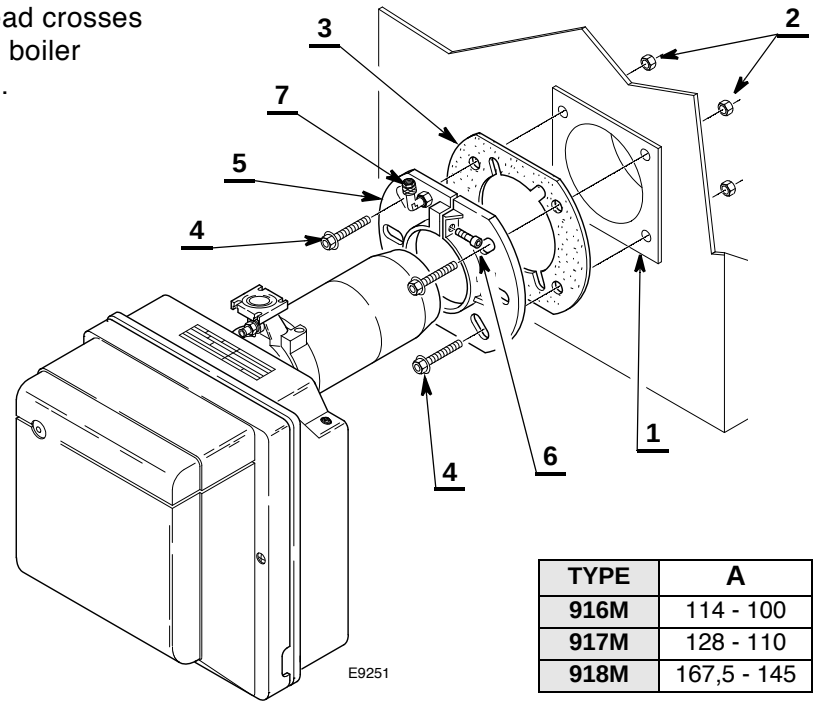

Fig. 2

Fig. 3

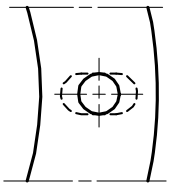

Fig. 4

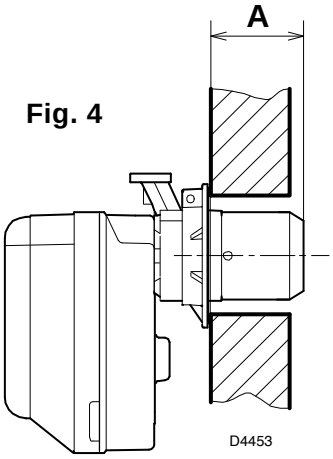

TYPE	A
916M	114 - 100
917M	128 - 110
918M	167,5 - 145

3.2 GAS TRAIN (according to EN 676)

The gas train is supplied separately, for its installation/adjustment see the enclosed instructions.

GAS TRAIN		MATCHED BURNER	CONNECTIONS		USE
Model	CODE		INLET	OUTLET	
CG 120	3970587	BS2/M	Rp 3/4”	Flange 2	Natural gas and LPG
CG 220	3970588	BS3/M - BS4/M	Rp 3/4”	Flange 3	Natural gas and LPG

Fig. 5

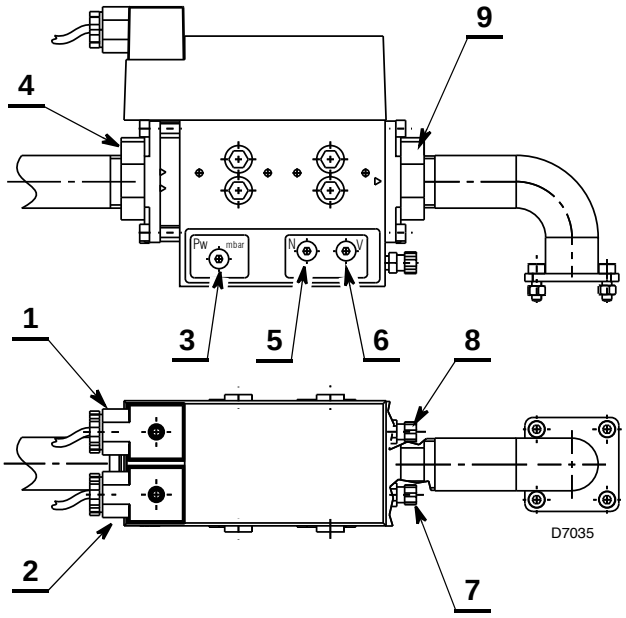

Key to lay-out

1 - Electrical connection for pressure switch
2 - Electrical connection for valves
3 - Setting screw for **“P_W”** gas pressure switch
4 - Gas inlet flange
5 - **“ZERO POINT” (N)** setting screw
6 - **“GAS/AIR RATIO” (V)** setting screw
7 - Pressure connection (combustion chamber) **“P_F”**
8 - Pressure connection (air) **“P_L”**
9 - Gas outlet flange

Fig. 6

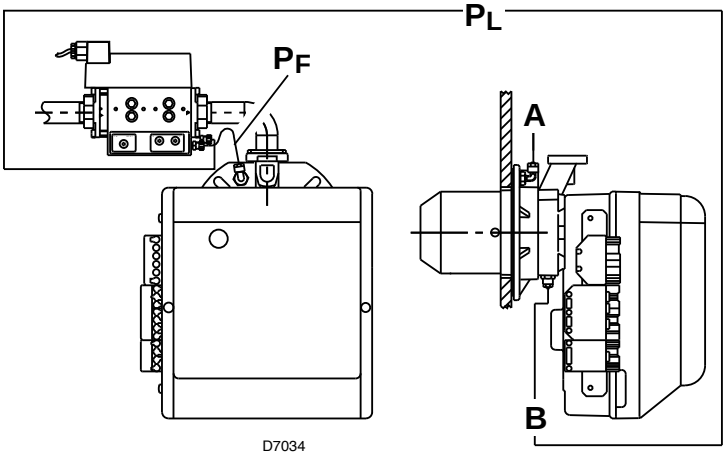

CONNECTION OF PRESSURE TAPS TO GAS TRAIN

To connect the taps proceed as follows:

➤ Fit the G1/8 connector (supplied with the burner) to **A** (burner flange).

➤ Cut the blue plastic tube supplied with the burner into two.

➤ Connect boiler tap **A** with valve tap **“P_F”** and sleeve tap **B** with valve tap **“P_L”** using the previously cut pipes.

ATTENTION

- ➤ The tube connecting valve tap **P_F** with boiler tap **A** must be positioned so that any condensate is drained into the combustion chamber and not inside the valve.
- ➤ The run for the pulse lines must be short.
- ➤ It is necessary for the pulse lines not to touch the boiler since the high temperature would damage them.
- ➤ In certain applications, where pressure measurement in the combustion chamber is inaccurate, it is necessary to move the G1/8 connector from the burner flange to the boiler door. In this case, blank the flange hole.
- ➤ Failure to do so may cause the valve to malfunction, and to be damaged.

3.3 GAS FEEDING LINE

Fig. 7

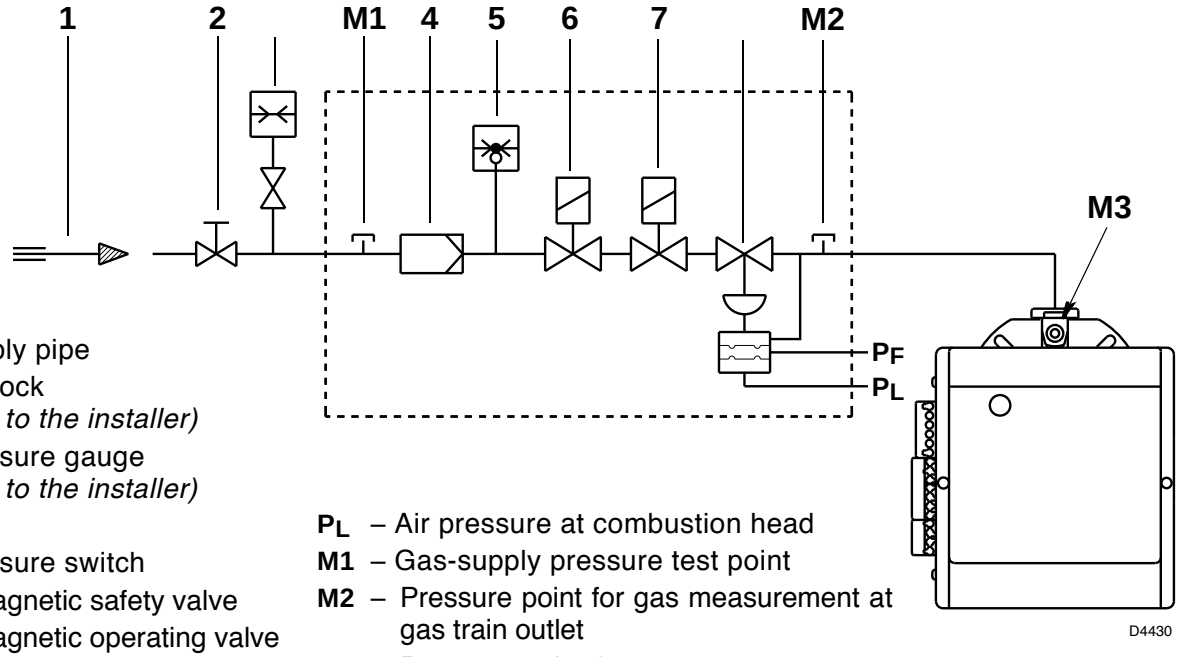

1 – Gas supply pipe
2 – Manual cock *(charged to the installer)*
3 – Gas pressure gauge *(charged to the installer)*
4 – Filter
5 – Gas pressure switch
6 – Electromagnetic safety valve
7 – Electromagnetic operating valve
8 – Pressure governor
P_F – Pressure in combustion chamber
P_L – Air pressure at combustion head
M1 – Gas-supply pressure test point
M2 – Pressure point for gas measurement at gas train outlet
M3 – Pressure point for gas pressure measurement at combustion head

3.4 PROBE - ELECTRODE POSITIONING

ATTENTION

- ➤ Verify that the plate (3, fig. 8) is always inserted in the flattening of the electrode (1).
- ➤ Lean the probe insulator (4) against the cup (2).

TYPE	A
916M	30
917M	31
918M	31

Fig. 8

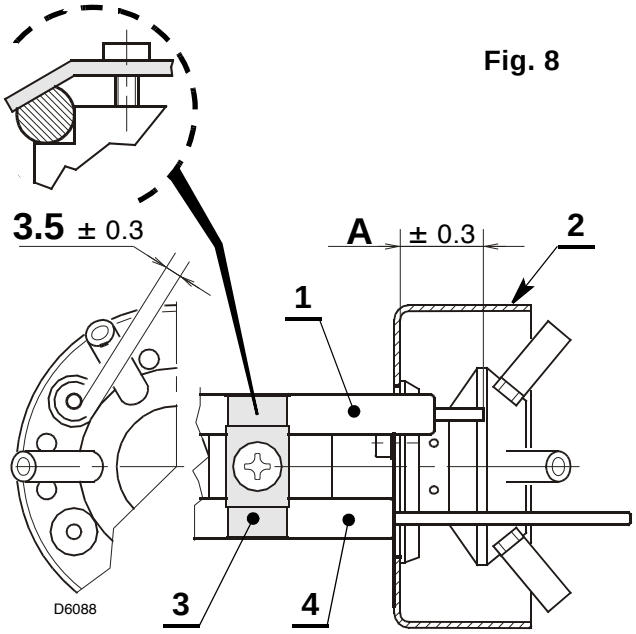

4. ELECTRICAL WIRING

4.1 ELECTRICAL SYSTEM, (as set up by the manufacturer)

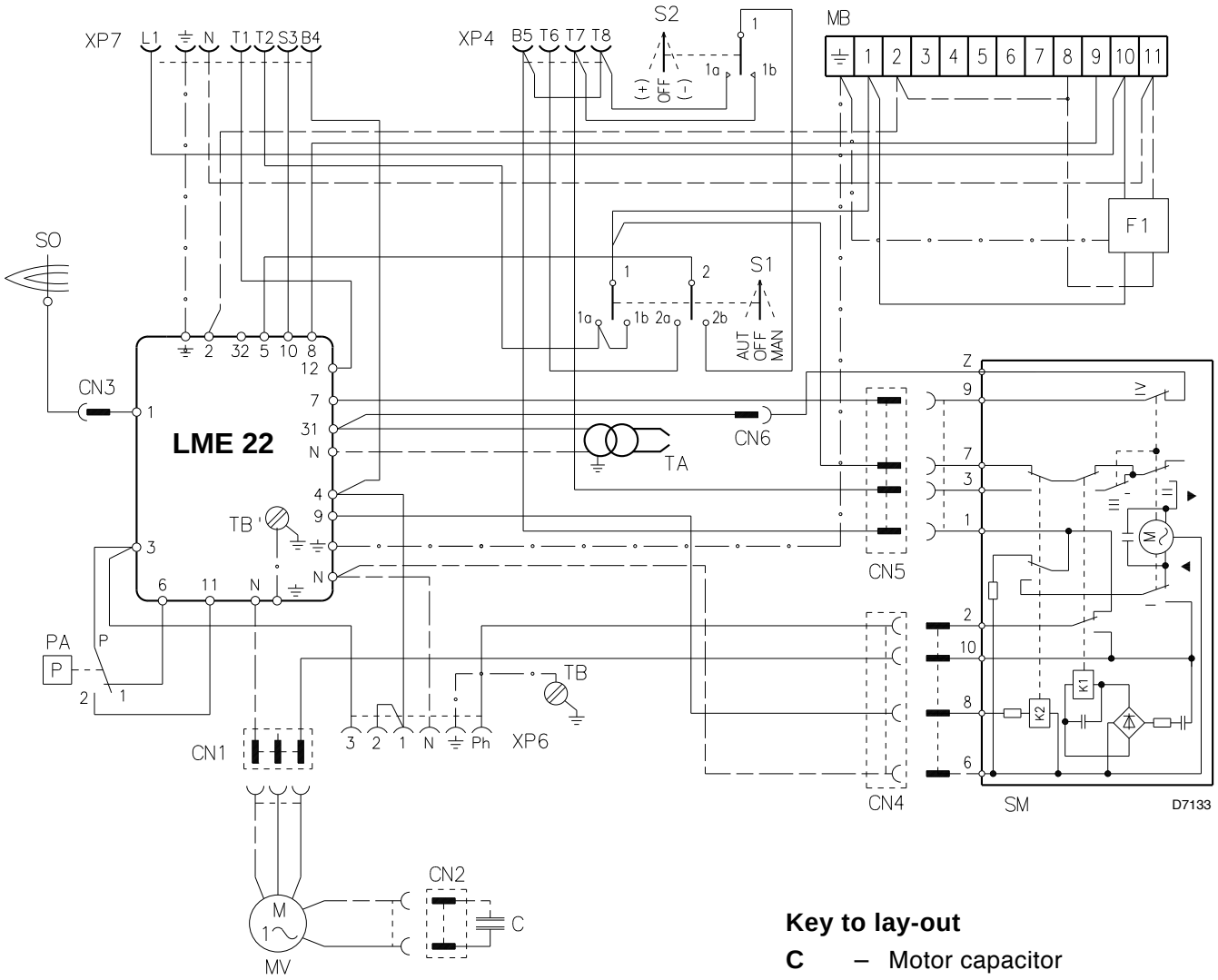

ATTENTION:

- ➤ **Do not swap neutral and phase over, follow the diagram shown carefully and carry out a good earth connection.**
- ➤ The section of the conductors must be at least 1mm□. *(Unless requested otherwise by local standards and legislation).*
- ➤ The electrical wiring carried out by the installer must be in compliance with the rules in force in the country.

TESTING

Check the shut-down of the burner by opening the thermostats, and the lock-out by opening the connector (**CN3**) inserted in the red cable of the probe placed outside of the control box.

NOTES

The burners have been type-approved for intermittent operation. This means they must stop at least once every 24 hours in order to allow the electrical control box to check its efficiency on start-up. The boiler limit thermostat (**TL**) normally ensures the burner halts. If this does not happen a time switch halting the burner at least once every 24 hours must be applied in series to limit thermostat (**TL**).

Key to lay-out

C – Motor capacitor
CN... – Connectors
F1 – Suppressor
MB – Auxiliary terminal block
MV – Motor
PA – Min. air pressure switch
SM – Servomotor
SO – Ionisation probe
S1 – Switch for:
MAN = manual operation
AUT = automatic operation
OFF = stand by
S2 – Button for:
– = power reduction
+ = power increase
TA – Ignition transformer
TB – Burner-earth
XP4 – 4 pole socket
XP6 – 6 pole socket
XP7 – 7 pole socket

4.2 ELECTRICAL CONNECTION (As set up by the installer)

WARNING

If the boiler has a the 7 pin plug, it should be replaced with the one supplied with the burner.

WITHOUT REGULATOR (high-low progressive mode operation)

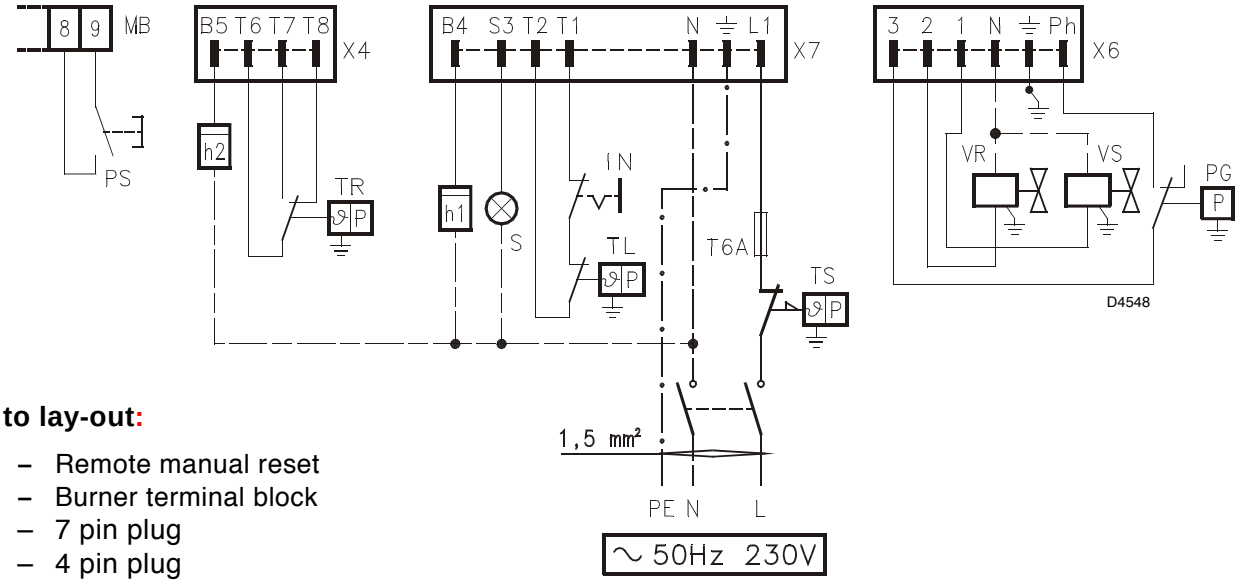

Key to lay-out:

PS – Remote manual reset
MB – Burner terminal block
X7 – 7 pin plug
X4 – 4 pin plug
X6 – 6 pin plug
h2 – 2nd stage hourcounter
TR – High-low mode control device system
h1 – 1st stage hourcounter
S – Remote lock-out signal
IN – Manual burner stop switch
TL – Limit control device system
T6A – Fuse
TS – Safety control device system
PG – Min. gas pressure svitch
VR – Adjustment valve
VS – Safety valve

WITH REGULATOR (fully modulating mode operation)

ATTENTION

Do not connect any contact between **T6** and **T8** at the 4 pin plug and between **T1** and **T2** at the 7 pin plug, in order to avoid interference with the regulator.

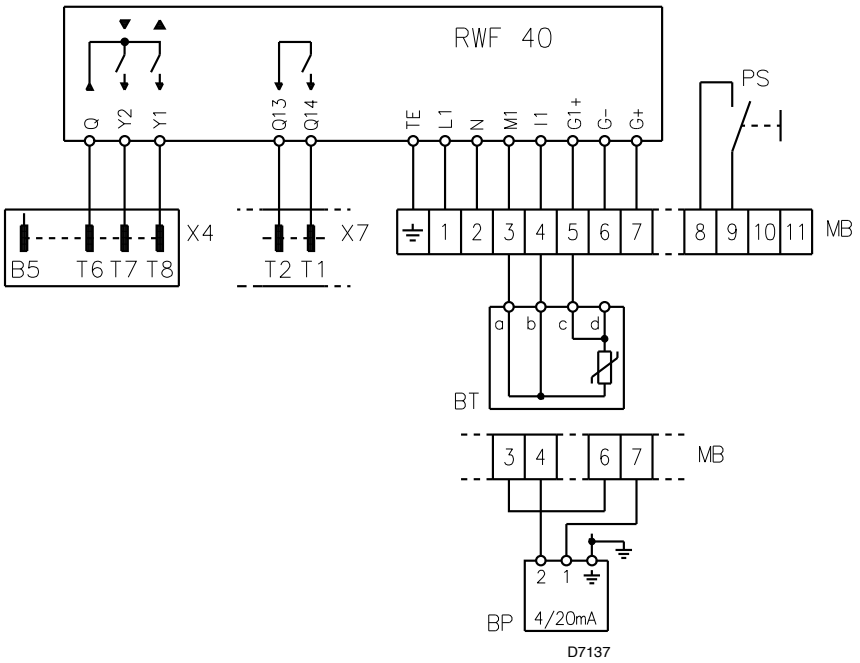

Key to lay-out:

PS – Remote manual reset
MB – Burner terminal block
X4 – 4 pin plug
X7 – 7 pin plug
BT – Temperature probe
BP – Pressure probe

5. WORKING

5.1 COMBUSTION ADJUSTMENT

In conformity with Efficiency Directive 92/42/EEC the application of the burner on the boiler, adjustment and testing must be carried out observing the instruction manual of the boiler, including verification of the CO and CO_2 concentration in the flue gases, their temperatures and the average temperature of the water in the boiler. To suit the required appliance output, choose the proper setting of the combustion head, and the air damper servomotor.

5.2 COMBUSTION HEAD SETTING, (see fig. 9)

Combustion head adjustment varies depending on burner delivery.
It is carried out by rotating clockwise or counter-clockwise the setting screw (6) until the set-point marked on the regulating rod (2) is level with the outside plane of the head assembly (1). In figure 9, the head's regulating rod is set to set-point 3.5.

Example for burner type 917M:
The diagram is orientative and indicates combustion head setting depending on required thermal power. To assure a good working of the burner, we suggest to adjust the combustion head according to the boiler.
The burner is installed in a 100 kW boiler. considering an efficiency of 90%, the burner will have to deliver about 110 kW; for this output, adjustment should be made to setpoint 3.5.

HEAD ASSEMBLY REMOVING
To remove the head assembly, carry out the following operations:
- ➤ Make sure servomotor (7) is in the closing position (**CAM II = 0**).
- ➤ Disconnect the connections (3 and 5).
- ➤ Loosen the screws (4) and remove the servomotor (7).

ATTENTION
Rotation shaft (10) managed by the servomotor (7) features a safety mechanism (11) that prevents it turning accidentally whilst maintenance work is in progress.

- ➤ Loosen the screw (9), loosen screws (8) and remove head-holder assembly (1) by rotating slightly to the right.

Take care not to alter the regulating rod-elbow (2) position while disassembling.

REASSEMBLY OF THE HEAD SYSTEM
Refit following the above procedure in the reverse order, restoring the head assembly (1) to its original position.

ATTENTION
- ➤ Tighten the screws (9) *(without locking them)* completely; then lock them with a torque wrench setting of 3 - 4 Nm.
- ➤ Control that, during the working, there are not gas losses coming from the screws.

Fig. 9

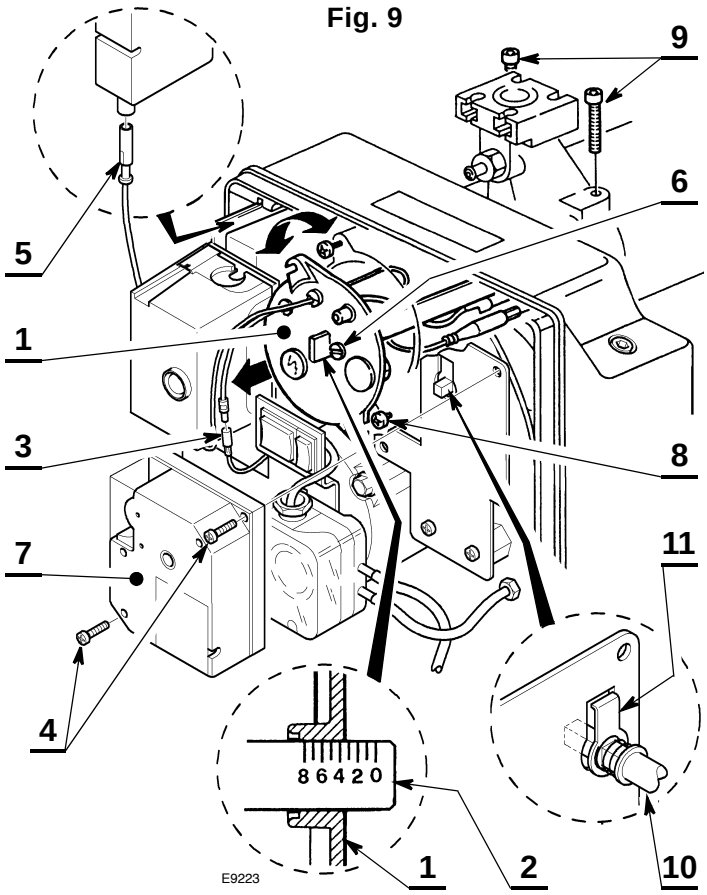

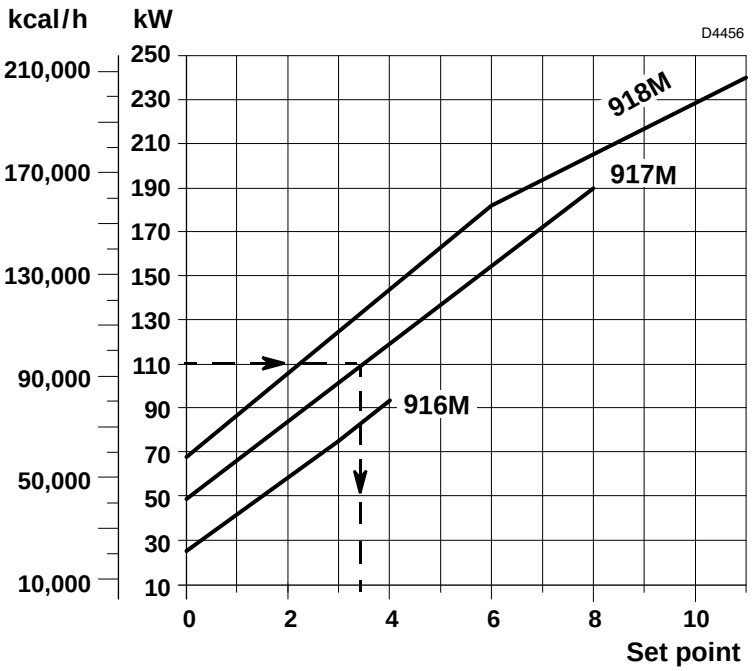

A For the burner to operate over a given output, in the model type 917M e 918M, you must remove the blank deadening to free the supplementary slits of the air inlet on the cover, as illustrated in figure 10.

TYPE	Thermal power - kW
917M	> 140
918M	> 200

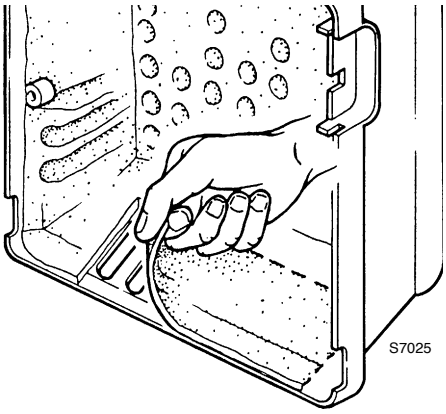

Fig. 10

5.3 SETTING OF THE AIR DAMPER SERVOMOTOR, (see fig. 11)

Fig. 11

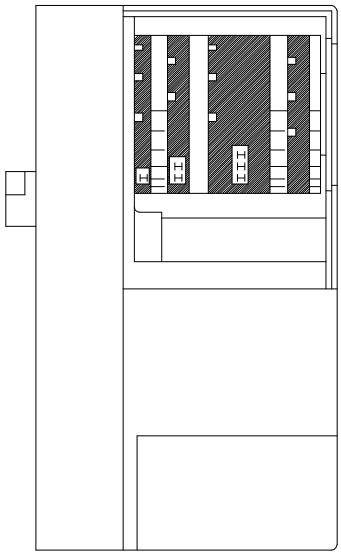

STAND-BY — **CAM II**

CAM II assures the fully closed position of the air damper, when the burner is shut down (stand by). It is adjusted by the factory at 0°. **DO NOT ALTER**.

FIRST STAGE — **CAM III**

CAM III adjusts the air damper for the ignition and for the minimum output. It can be adjusted whilst it is being put into service. **CAM IV** is integral with **CAM III**.

SECOND STAGE — **CAM I**

I limits the rotation at the maximum output. It is adjusted at 90° by the factory. **DO NOT INCREASE THAT VALUE**: the burner can be damaged.

The servomotor only follows adjustment of **CAM III** when the cam's angle is reduced.

If the cam's angle needs increasing, you must first increase the servomotor angle with the "increase output **(+)**" key, then increase the angle of **CAM III** and, lastly, return the servomotor to the MIN output position with the "decrease output **(-)**" key.

Where necessary, **CAM III** can be adjusted by removing cover (1), which is snapped on, as illustrated in fig. 12, removing the relevant key (2) from inside, and inserting it in the slot on **CAM III**.

Fig. 12

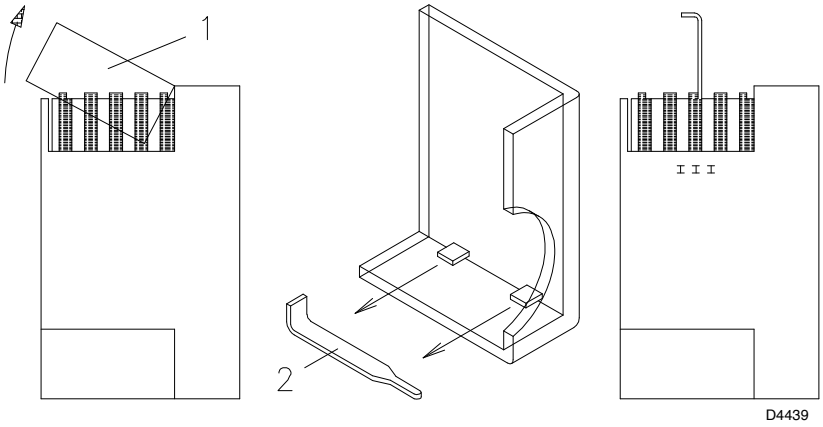

5.4 FIRST START-UP, (see fig. 13 and fig. 5 page 6)

Fig. 13

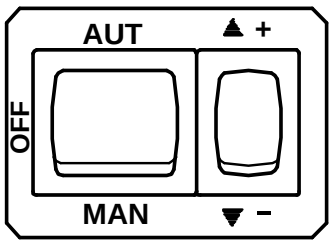

Once you have made sure wiring is correct, and checked hydraulic connections for leaks, set the air pressure switch to the minimum value.

Connect the pressure gauge to the gas pressure test point at the burner head (**M3**, fig. 7 page 7).

The following table gives start-up settings with reference to a burner fuelled with methane gas.

Reference values are:

– firing power;
– air damper preset position (**CAM III**);
– preset position of gas train **POINT 0** setting screw;
– the model of gas train to be used.

TYPE	Firing power	Adjustment CAM III	Adjustment 0 POINT	Adjustment GAS/AIR RATIO	GAS TRAIN
	kW	Set point	Set point	Set point	Model
916M	26 ÷ 33	20° ÷ 30°	◆	Depends on maximum output	**CG 120**
917M	48 ÷ 83	30° ÷ 40°	◆		**CG 220**
918M	68 ÷ 110	30° ÷ 35°	◆		**CG 220**
917M	48 – 83	30° – 40°	0.1 – 0.25	Depends on maximum output	**MBC - 300 - VEF**
918M	68 – 110	30° – 35°	-0.7 – -0.5		**MBC - 700 - VEF**

◆ Set to values close to start of scale (-1.5).

1 - Depending on required maximum output, adjust the combustion head as indicated on page 10.

2 - Select manual operating mode **"MAN"** and calibrate the servomotor's **CAM III** and adjust the **0 POINT** setting screw as indicated in the table, then start the burner.

3 - Once it has fired, move the servomotor by hand towards the second flame position by pressing switch **(+)**. During this operation, check flame stability: if it looks unstable, adjust the **GAS/AIR RATIO** setting screw to increase or decrease the setting **until you reach the maximum desired output and correct CO_2 values for fumes**. Next, set **CAM I** to the value reached by the servomotor.

4 - Move the servomotor by hand towards the first flame position by pressing switch **(-)**.
Check combustion and, where necessary, use the **0 POINT** setting screw only to achieve correct CO_2 values for fumes.

5 - If first flame output needs altering, adjust **CAM III**.
All **0 POINT** setting screw adjustments will also cause the maximum gas delivery to be varied.

6 - Return the servomotor to maximum opening and check maximum output again, adjusting with the **GAS/ AIR RATIO** setting screw.

7 - Turn the servomotor to first flame position again and adjust output again, adjusting with the **0 POINT** setting screw only.

8 - Repeat steps (6) and (7) until **GAS/AIR RATIO** and **0 POINT** setting screws no longer need adjusting.

9 - Check combustion values at intermediate output and, where necessary, adjust further with **GAS/AIR RATIO** and **0 POINT** setting screws.
Once you have done, and have made sure the burner features good firing and good flame stability, select automatic mode by setting the selector to **"AUT"**. modulation will occur between the setting position of **CAM III** and that of **CAM I**.

5.5 COMBUSTION CHECK

In conformity with Efficiency Directive 92/42/EEC the application of the burner on the boiler, adjustment and testing must be carried out observing the instruction manual of the boiler, including verification of the CO and CO_2 concentration in the flue gases, their temperatures and the average temperature of the water in the boiler.
It is advisable to set the burner according to the type of gas used and following the indications of the table:

EN 676		AIR EXCESS: max. output $\lambda \leq 1.2$ – min. output $\lambda \leq 1.3$			
GAS	Theoretical max. CO_2 0 % O_2	Setting CO_2 % $\lambda = 1.2$	$\lambda = 1.3$	CO mg/kWh	NO_x mg/kWh
G 20	11.7	9.7	9.0	≤ 100	≤ 170
G 30	14.0	11.6	10.7	≤ 100	≤ 230
G 31	13.7	11.4	10.5	≤ 100	≤ 230

IONIZATION CURRENT

The minimum current necessary for the control box operation is 2 μA.
The burner normally supplies a higher current value, so that no check is needed. Anyway, if you want to measure the ionization current, you have to open the connector **(CN3)**, (see electrical scheme page 8) fitted on the wire and insert a microammeter.

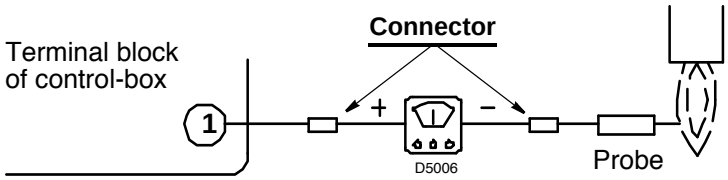

5.6 AIR PRESSURE SWITCH

Adjust the air pressure switch once you have performed all the other burner adjustments with the air pressure switch set to the start of the scale. With the burner operating at minimum output, turn the knob slowly clockwise until the burner locks out. Next, turn the knob anticlockwise by a value of approx. 20% of the set value and then make sure the burner starts properly. If the burner locks out again, turn the knob just a bit further anticlockwise.

Attention:

As a rule, the air pressure switch must prevent the air pressure from lowering below 80% of the adjustment value as well as preventing the CO in the fumes from exceeding 1% (10,000 ppm).

To check this, insert a combustion analyser into the chimney, slowly close the fan suction inlet *(for example with cardboard)* and check that the burner locks out, before the CO in the fumes exceeds 1%.

5.7 GAS PRESSURE SWITCH

For the gas pressure switch setting see the gas train instruction manual.

5.8 BURNER START-UP CYCLE

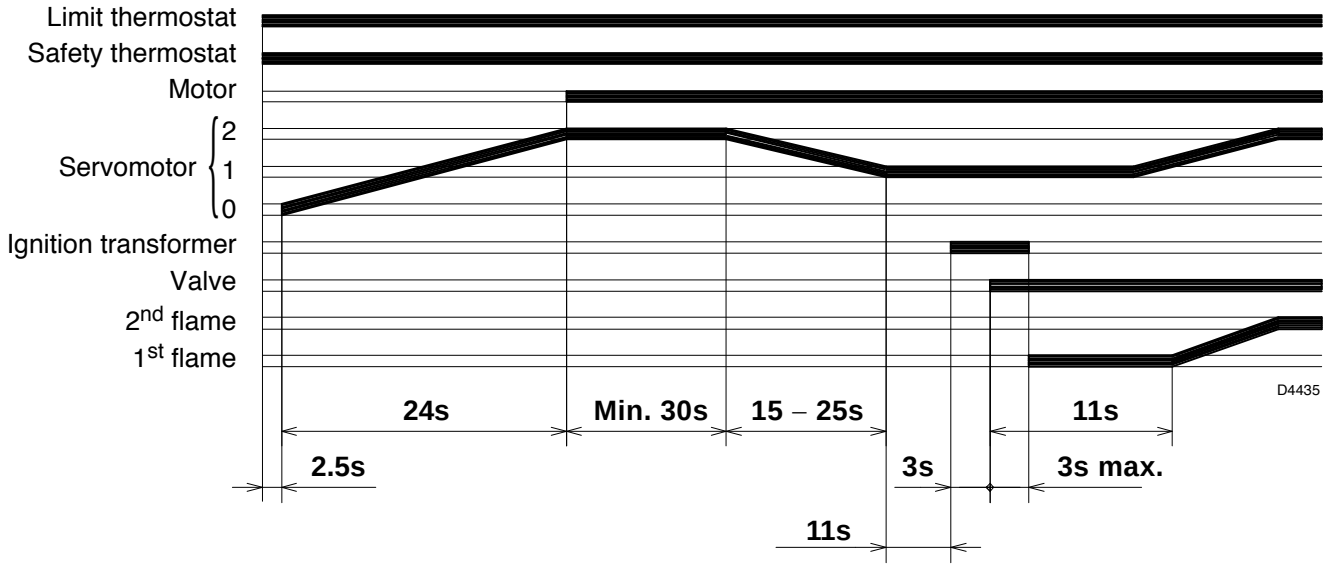

6. MAINTENANCE

The burner requires periodic maintenance carried out by a qualified and authorised technician **in conformity with legislation and local standards.**

Maintenance is essential for the reliability of the burner, avoiding the excessive consumption of fuel and consequent pollution.

Before carrying out any cleaning or control always first switch off the electrical supply to the burner acting on the main switch of the system.

THE BASIC CHECKS ARE:THE FUNDAMENTAL OPERATIONS TO CARRY OUT ARE AS FOLLOWS:

- ➤ Check at regular intervals that the holes of the gas head are not obstructed. If they are, clean them with a suitable tool as shown in the figure 14.
- ➤ Check there are no occlusions or obstructions in the inlet or return pipes, in the air suction areas and in the combustion product waste pipe.
- ➤ Check that the burner and gas train electrical connections are correct.
- ➤ Check that the gas train is suited to the burner capacity, the type of gas used and the network gas pressure.
- ➤ Check that the positioning of the combustion head is correct and that it is properly fixed to the boiler.
- ➤ Check that the air damper is positioned correctly.
- ➤ Check that the ionisation probe and the electrode are positioned correctly (see fig. 8, page 7).
- ➤ Check that the air pressure switch and the gas pressure switch are set correctly.

Fig. 14

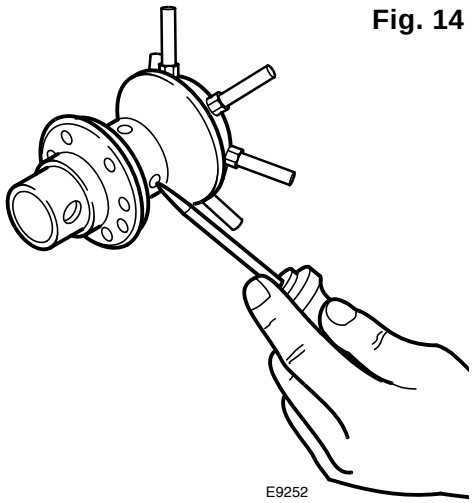

Leave the burner working without interruptions for 10 min. and checking the right 1st and 2nd stage settings of all the components stated in this manual.

Then carry out a combustion check verifying:

- CO_2 percentage (%);
- CO content (ppm);
- NOx content (ppm);
- Ionisation current (μA);
- Flue gases temperature at the stack.

7. FAULTS / SOLUTIONS

The control box has a self-diagnostic system, by which it is possible to easily check the faults and find the solutions.
To use this function, wait for a minimum of 10 sec after the lock out, then push the reset button for 3 sec. After releasing the button, the RED LED will begin to flash, as shown in the following schedule.

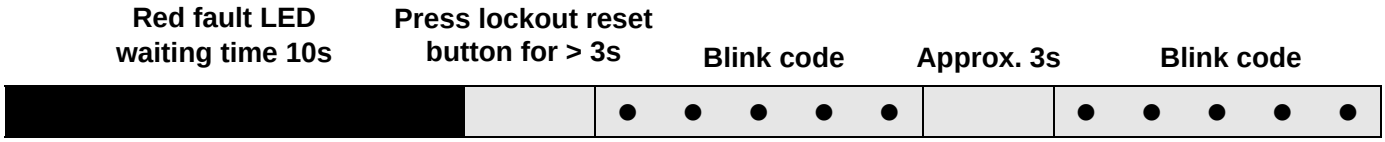

The LED provide a blink code each 3sec.
The blink codes give the information of the possible faults, as follows:

BLINK CODE	POSSIBLE CAUSE
2 ● ●	The flame does not stabilize at the end of the safety time: – faulty or soiled ionization probe; – faulty or soiled fuel valves; – neutral/phase exchange; – poor burner regulation.
3 ● ● ●	Minimum air pressure switch does not close: – make sure VPS trips to produce lockout; – air pressure switch faulty; – air pressure switch incorrectly regulated; – fan motor does not run; – maximum air pressure switch operating.
4 ● ● ● ●	Extraneous light during pre-purging, or control box faulty.
5 ● ● ● ● ●	Minimum air pressure switch does not open: – air pressure switch faulty; – air pressure switch incorrectly adjusted.
7 ● ● ● ● ● ● ●	Loss of flame during operation: – poor burner regulation; – faulty or soiled fuel valves; – short circuit between ionization probe and earth.
10 ● ● ● ● ● ● ● ● ● ●	Control box faulty.

8. GENERAL INFORMATION

IDENTIFICATION

The Identification Plate on the product gives the serial number, model and main technical and performance data. If the Identification Plate is tampered with, removed or missing, the product cannot be clearly identified thus making any installation or maintenance work potentially dangerous.

GENERAL WARNINGS

The dimension of the boiler's combustion chamber must respond to specific values, in order to guarantee a combustion with the lowest polluting emissions rate.
The Technical Service Personnel will be glad to give you all the imformation for a correct matching of this burner to the boiler.

This burner must only be used for the application it was designed for.

The manufacturer accepts no liability within or without the contract for any damage caused to people, animals and property due to installation, adjustment and maintenance errors or to improper use.

USER INFORMATION

If faults arise in ignition or operations, the burner performs a "safety stop", which is signalled by the red burner lock out Led. To rearm start up conditions, press the release button.
When the burner starts up again, the red Led goes out. This operation can be repeated for a maximum of 3 times.
If the "safety stop" recurs, then the Technical Assistance Centre must be called out.

BASIC SAFETY MEASURES

- ➤ Children or inexpert persons must not use the appliance.
- ➤ Under no circumstances must the intake grids, dissipation grids and ventilation vents in the installation room be covered up with cloths, paper or any other material.
- ➤ Unauthorised persons must not attempt to repair the appliance.
- ➤ It is dangerous to pull or twist the electric leads.
- ➤ Cleaning operations must not be performed if the appliance is not disconnected from the main power supply.
- ➤ Do not clean the burner or its parts with inflammable substances (e.g. petrol, alcohol, etc.). The cover must be cleaned with soapy water.
- ➤ Do not place anything on the burner.
- ➤ Do not block or reduce the size of the ventilation vents in the installation room.
- ➤ Do not leave containers and inflammable products in the installation room.

目录

1. 燃烧器描述

平滑两段火或机械比例调节燃气燃烧器。

➤ 燃烧器符合以下指令：EMC 89/336/EEC - 2004/108/EC, 低电压 73/23/EEC - 2006/95/EC, 机械 98/37/EEC - 2006/42/EC。
➤ 本燃烧器符合 EN 676 标准所规定之间歇式运行。
➤ 本燃烧器电气保护等级为 IP X0D (IP 40)，符合 EN 60529 标准。
➤ 燃气阀组符合 EN 676 标准。

图 . 1

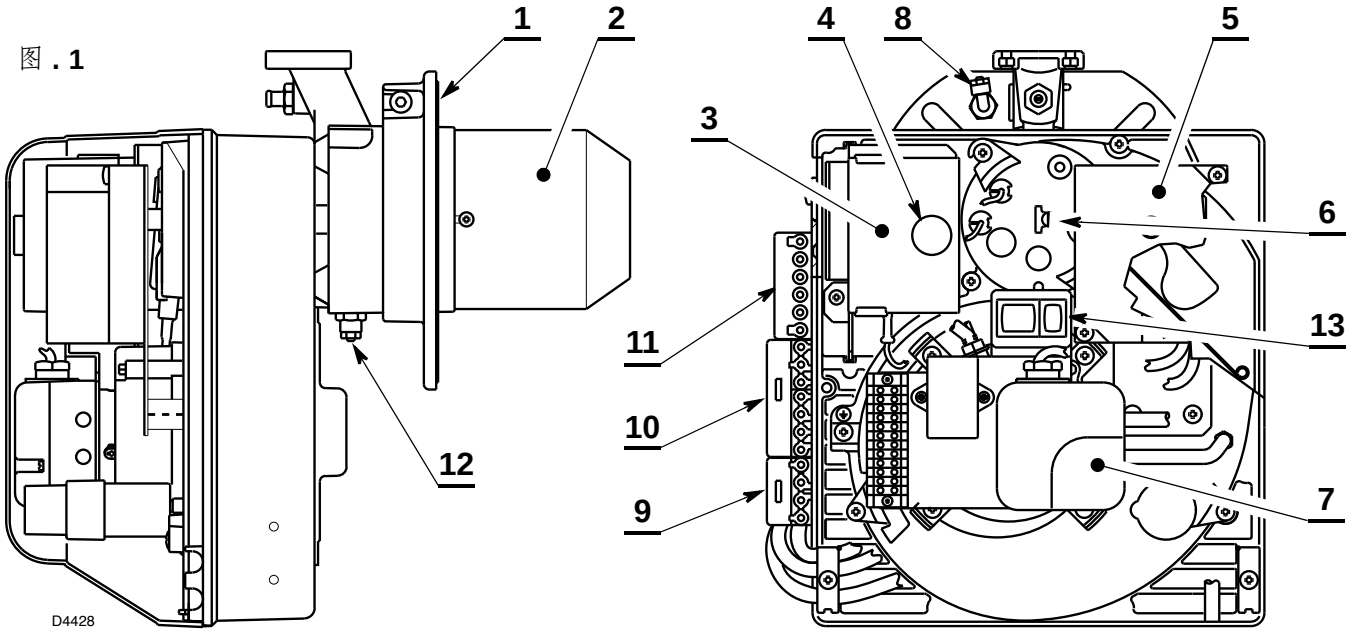

1 – 带隔热垫的法兰
2 – 燃烧筒
3 – 控制盒
4 – 带锁定指示灯的复位键
5 – 风门挡板调节组件
6 – 调节燃烧头用螺丝
7 – 空气压力开关
8 – 炉膛内空气压力测试点 (与燃气阀组件连接)
9 – 2 段火 / 比例调节运行用 4 孔插座
10 – 燃烧器用 7 孔插座
11 – 燃气阀组用 6 孔插座
12 – 空气压力测试点 (与燃气阀组件连接)
13 – 运行模式转换开关：
自动 / 手动 模式 (AUT / MAN)
增加 / 降低 出力 (+/-)

1.1 燃烧器配置

带隔热垫的法兰 . . . . . 1 件
安装法兰到锅炉用螺丝及螺母 . . . . . 4 件
法兰用螺丝及螺母 . . . . . 1 件
蓝色塑料管 . . . . . 1 件
G1/8 弯头组件 . . . . . 1 件
4 针插头 . . . . . 1 件
7 针插头 . . . . . 1 件

1.2 配件 (可选):

- 组件 **(PC** 接口组件 **):** 代码 **3002719**
- 出力比调仪组件

在比例调节模式下，燃烧器自动调节至低火 - 高火出力范围内任意出力值，因此可以根据温度及压力保证燃烧器平稳运行。需订购两个零部件：-- 安装于燃烧器上的出力比调仪；--安装于锅炉上的探针。

需控制的参数	探针			比调仪	
	范围	型号	代码	型号	代码
温度	– 100...+ 500 °C	PT 100	3010110	RWF40	3001078
压力	0...2.5 bar	出力探针 4...20 mA	3010213		
	0...16 bar	出力探针 4...20 mA	3010214		

2. 技术数据

2.1 技术数据

类型		916M	917M	918M
热出力 **(1)**	kW	26/49 – 91	48/79 – 195	68/140 – 250
	Mcal/h	22.4/42.1 – 78.2	41.3/67.9 – 167.7	58.5/120.4 – 215
天然气 **(**2 类 **)**		净热值：8 – 12 kWh/Nm^3 = 7000 – 10.340 kcal/Nm^3		
		压力：最小 20 mbar – 最大 36 mbar		
电源		单相， 230V ± 10% ~ 50Hz		
电机		运行电流 0.8 A 2800 rpm 293 rad/s	运行电流 1.8 A 2800 rpm 293 rad/s	运行电流 1.9 A 2800 rpm 293 rad/s
电容		4 μF	6.3 μF	8 μF
点火变压器		初级 230V – 45 VA 次级 1 x 15 kV – 25 mA		
消耗电功率		0.18 kW	0.35 kW	0.53 kW
(1) 参考条件：温度 15°C - 大气压力 1013 mbar – 海拔高度 0 m				

如果使用 3 类燃气 **(LPG)**，需另配其它组件。

国家			AT - CH - IS	GB - IE - IT	DE	FR	NL	BE	LU
燃气类型			$I_{2H3B/P}$	I_{2H3}	$I_{2ELL3B/P}$	I_{2Er3P}	$I_{2L3B/P}$	$I_{2E(R)B/I3}$	$I_{2E3B/P}$
燃气压力	**G20**	**H**	20	20	–	–	–	–	20
	G25	**L**	–	–	20	–	25	–	–
	G20	**E**	–	–	20	20/25	–	20/25	–

2.2 外观尺寸

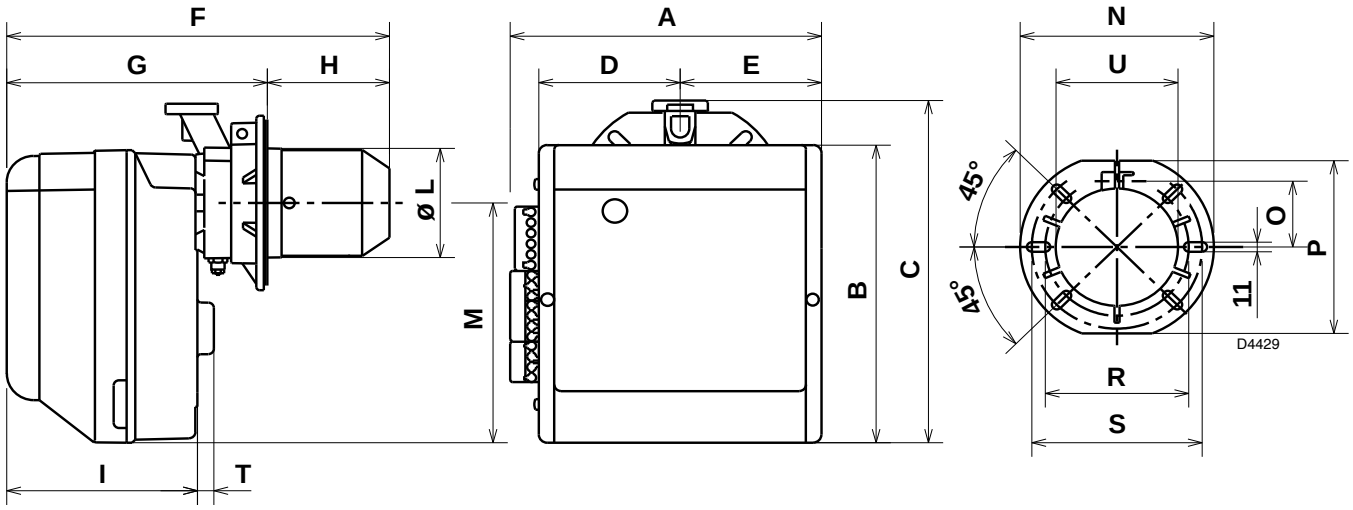

类型	A	B	C	D	E	F	G	H	I	L - U	M	N	O	P	R	S	T
916M	285	280	325	125.5	125.5	352	238 – 252	114 – 100	174	106	230	192	66	167	140	170	18
917M	330	345	391	150	150	390	262 – 280	128 – 110	196	129	285	216	76.5	201	160	190	21
918M	330	345	392	150	150	446	278 – 301	168 – 145	212	137	286	218	80.5	203	170	200	21

2.3 出力图

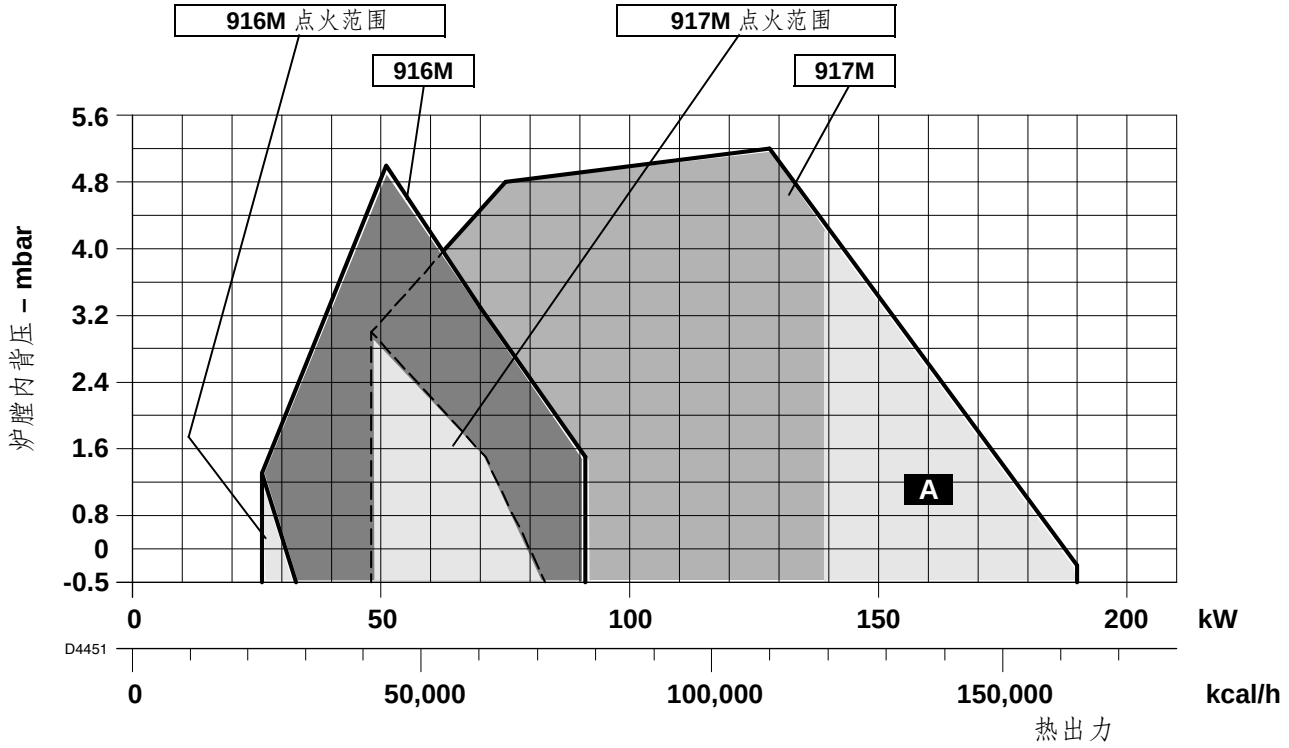

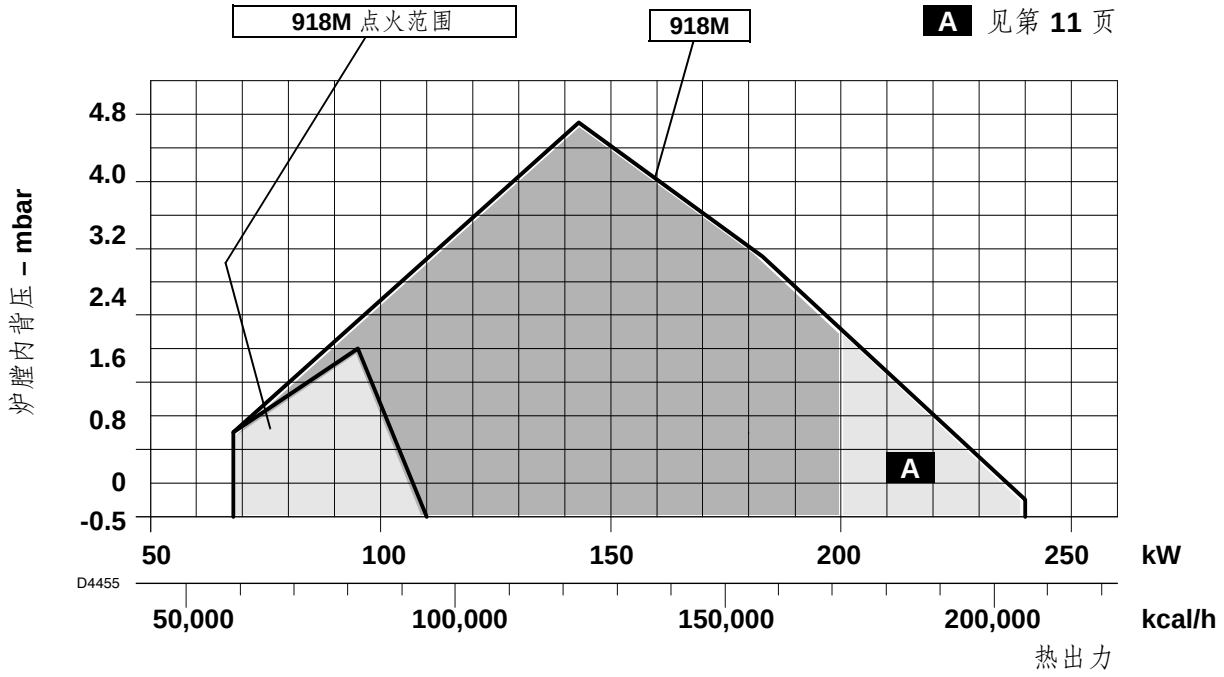

注意事项

为了保证燃烧器的正常运行，燃烧器必须在相应的出力范围内启动 (见 12 页图表)。

测试锅炉

根据 EN 676 标准测定燃烧器出力范围。

商用锅炉

如果锅炉符合 EN 303 标准，炉膛尺寸与 EN 676 给出的图表所示相似，则燃烧器和锅炉相互匹配。如果锅炉不符合 EN 303 标准，或炉膛尺寸大大小于 EN 676 所给出的尺寸，请咨询制造商。

燃气压力与燃烧器出力的对应关系

对于 916M 型燃烧器在炉膛背压为 0 mbar，使用净热值为 9,45kWh/m^3 (8.127 kcal/m^3) 的燃气 G20 时，要获得最大出力，燃烧头处测得的压力 (**M2**，见章 4.3，页 7) 为 9.3 mbar。

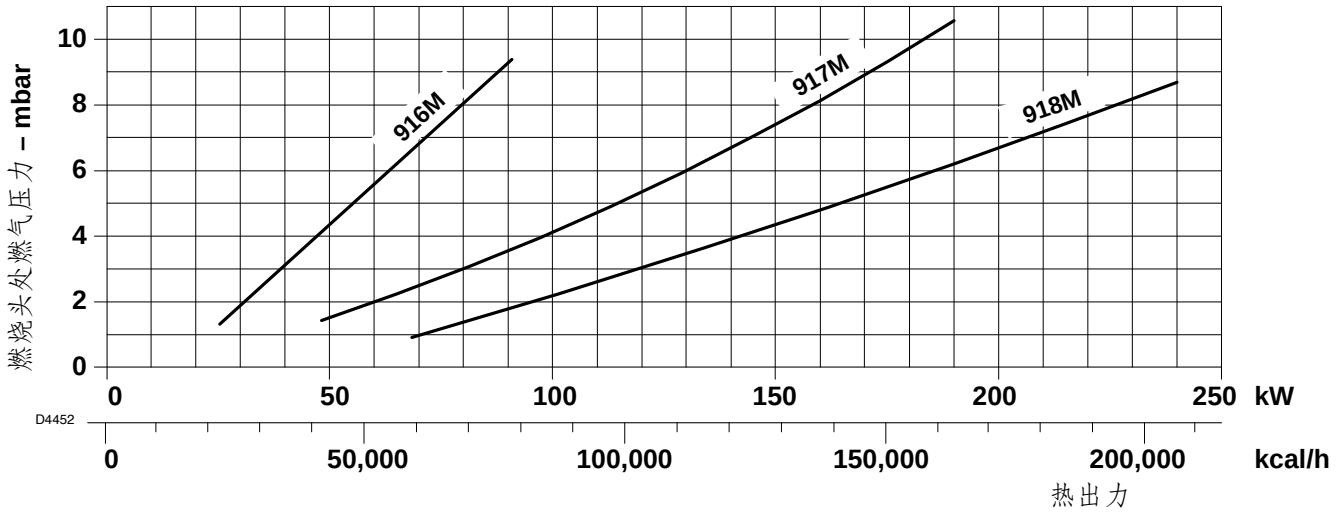

3. 安装

燃烧器的安装必须符合当地强制标准。

3.1 燃烧器安装

- ➤ 必要时，可将隔热垫上的开孔 (3，图 3) 扩大，但注意不要损坏隔热垫。
- ➤ 安装随燃烧器附带的压力测试点 (7) 在法兰 (5) 上。
- ➤ 使用 4 个螺丝 (4) 以及螺母 (2)（如必要）将法兰 (5) 安装到锅炉炉门 (1) 上，并插入隔热垫 **(3)**，但要保留最上面两个螺丝 (4) 中的一个不拧紧 (见图 2)。
- ➤ 将燃烧头穿过法兰 (5)，用螺丝 (6) 将法兰上紧，并将松动的螺丝 (4) 拧紧。
- ➤ 检查确认压力测试点 (7) 可以透过隔热垫正确测量炉膛压力。如果压力信号不清晰，将压力测试点与炉膛直接连接 (如可能，可将导管穿过观火孔)。如果炉膛内压力测试点不能有效连接，则会导致燃烧器点火状态差以及运行不安全。

注意事项 **:** 燃烧器可以安装于不同尺寸的锅炉 **(A)** (见图 4)。
但要确保燃烧头完全穿过锅炉炉门。

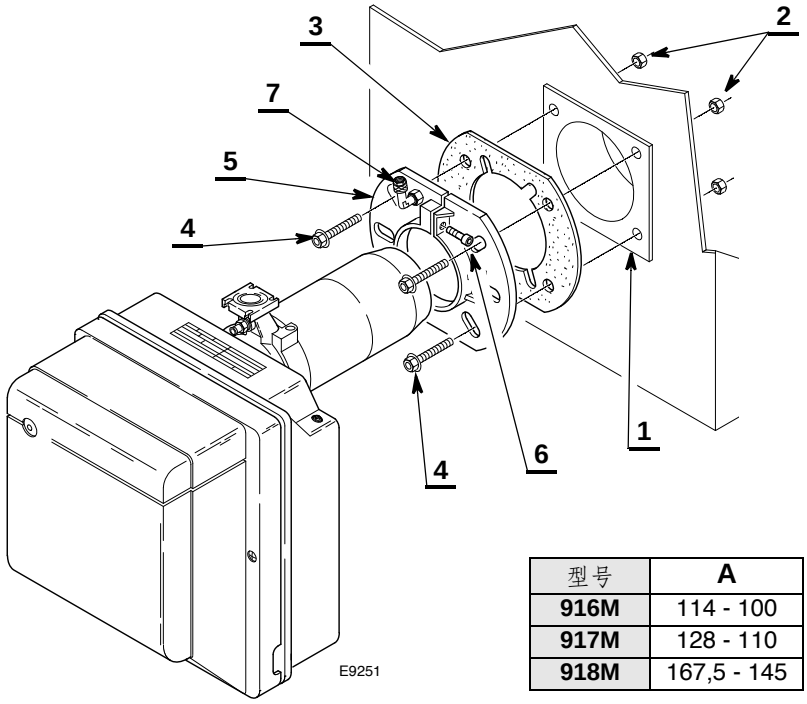

图 **2**

Fig. 3

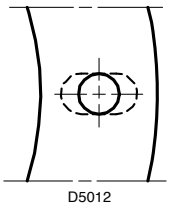

图 **4**

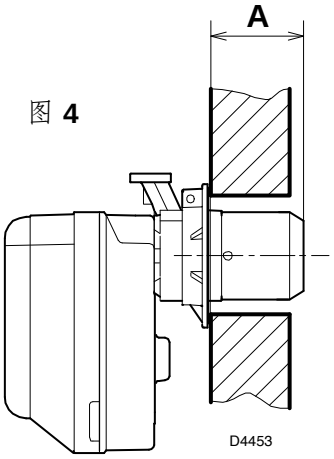

型号	A
916M	114 - 100
917M	128 - 110
918M	167,5 - 145

3.2 燃气阀组 (符合 EN 676 标准)

燃气阀组单独提供，其安装、调试参见随附手册。

燃气阀组		可匹配燃烧器	连接		应用
型号	编码		进口	出口	
CG 120	3970587	BS2/M	Rp 3/4”	法兰 2	天然气和 LPG
CG 220	3970588	BS3/M - BS4/M	Rp 3/4”	法兰 3	天然气和 LPG

图 **5**

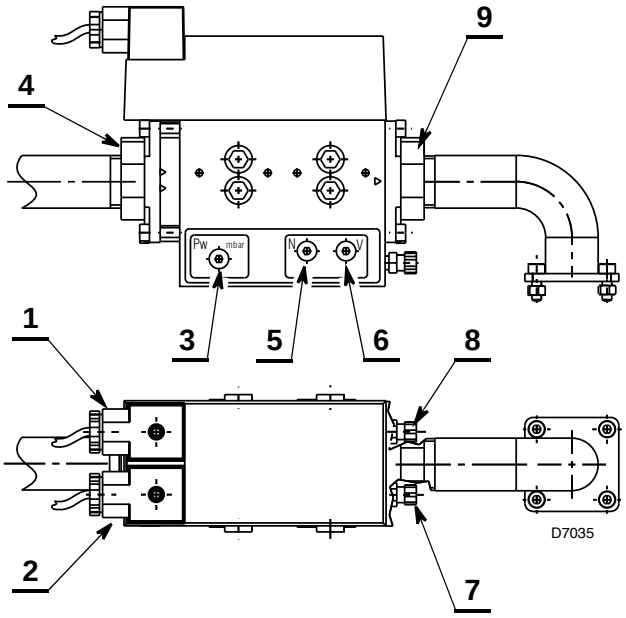

图例

1 - 压力开关电气连接
2 - 阀组电气连接
3 - 设置燃气压力开关 **“P_W”** 用螺丝
4 - 燃气进口端法兰
5 - **“** 零点 **” (N)** 设置螺丝
6 - **“** 燃气 **/** 空气 比例 **” (V)** 设置螺丝
7 - 压力接口 (炉膛) **“P_F”**
8 - 压力接口 (空气) **“P_L”**
9 - 燃气出口端法兰

图 **6**

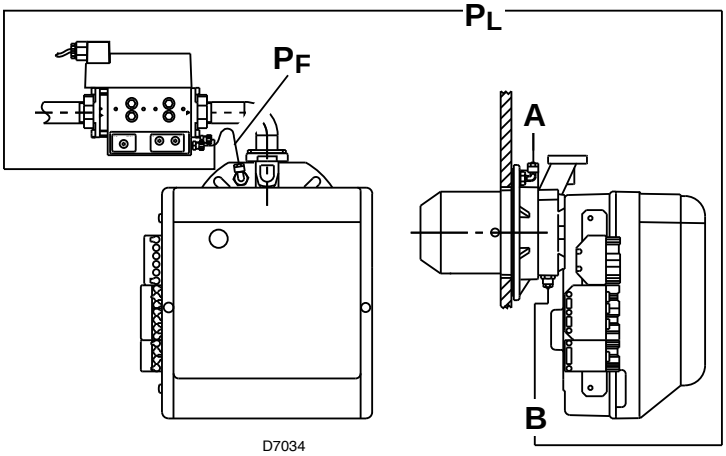

连接压力管到燃气阀组上

要连接压力管，请按以下步骤进行：

➤ 将G1/8 的连接插头(燃烧器随附)安到**A**点上 (燃烧器法兰)。

➤ 将随燃烧器提供的蓝色塑料管一分为二。

➤ 用两根蓝色塑料管分别将锅炉接口 **A** 与阀组接口 **“P_F”**、燃烧头接口 **B** 与阀组接口 **“P_L”** 相连接。

注意事项

➤ 必须将连接阀组接口 **P_F** 和锅炉接口 **A** 的蓝色塑料管位置调整得当，以使冷凝水从炉膛排出而不会进入阀组。
➤ 脉冲管的连接距离必须很短。
➤ 不要让脉冲管接触锅炉，以避免锅炉高温导致其损坏。
➤ 在特定运行情况下，如炉膛内压力测量不准确，则有必要将 G1/8 连接头由燃烧器法兰处移至锅炉炉门。在此情况下，需封住法兰上的孔。
➤ 如操作失败可能会导致阀组无法正常工作，甚至损害阀组。

3.3 燃气供应管路

图 **7**

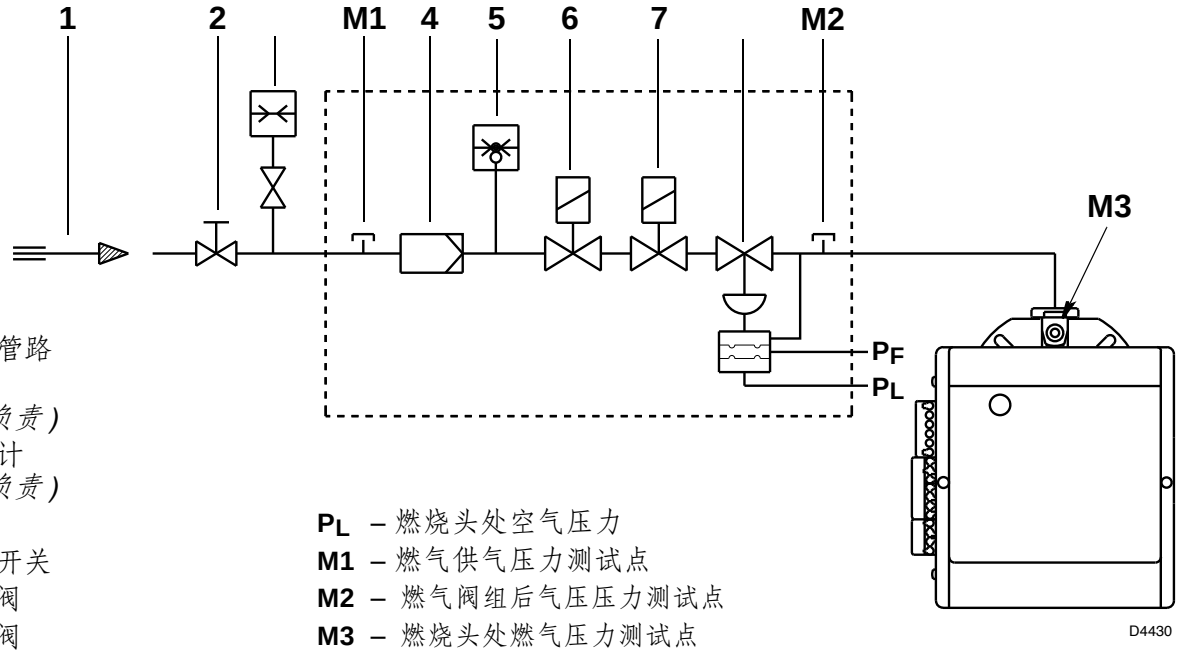

1 – 燃气供应管路
2 – 手动阀
(安装方负责)
3 – 燃气压力计
(安装方负责)
4 – 过滤器
5 – 燃气压力开关
6 – 电磁安全阀
7 – 电磁运行阀
8 – 调压器
P_F – 炉膛压力

P_L – 燃烧头处空气压力
M1 – 燃气供气压力测试点
M2 – 燃气阀组后气压压力测试点
M3 – 燃烧头处燃气压力测试点

3.4 探针电极位置

注意事项

➤ 确保平板 (3，图 8) 总是压在电极 (1) 的扁平位置。
➤ 将探针绝缘体 (4) 靠于杯形罩 (2) 上。

类型	A
916M	30
917M	31
918M	31

图 **8**

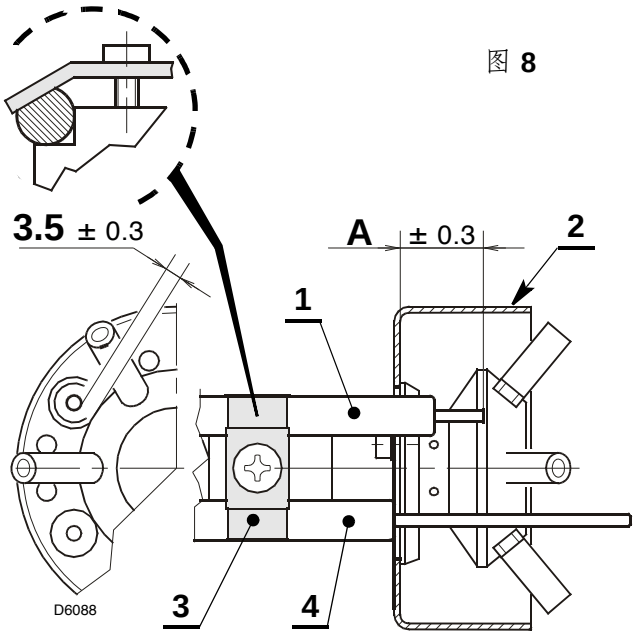

4. 电气连接

4.1 电气系统，(由制造商设置)

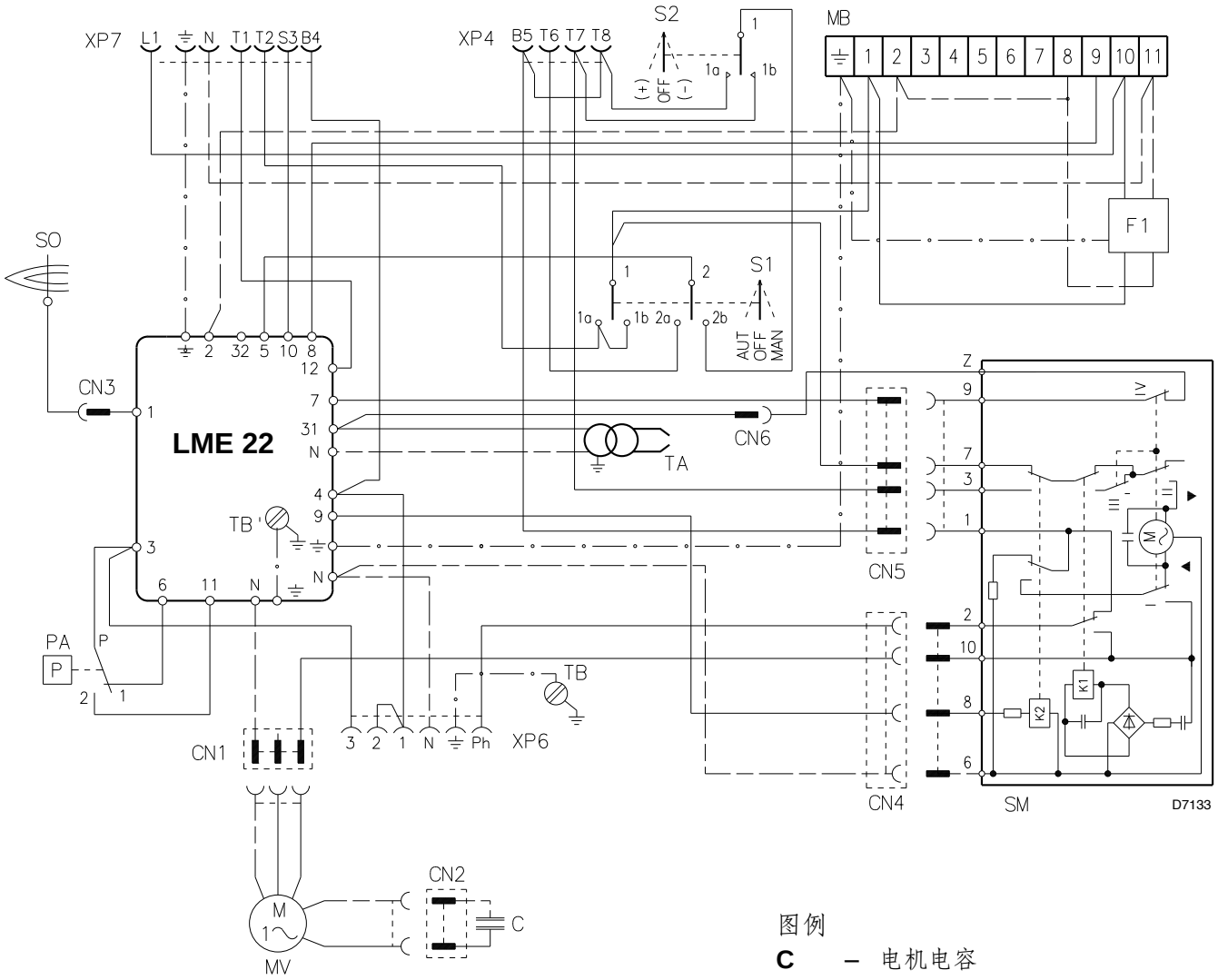

注意事项：

➤ 不得将零线-相线接反，认真按照电气接线图进行电气连接，保证良好的接地性。

➤ 导线截面积必须至少为 1mm^2。*(当地强制性要求有其它规定的除外)*。

➤ 安装方进行电气连接时必须符合当地的强制要求。

测试

断开温控开关，检查燃烧器是否停机。断开控制盒外电离探针的红色电缆连接头 (**CN3**)，检查燃烧器是否锁定。

注意

燃烧器为间歇式运行，即必须每 24 小时至少停机一次，以检查控制盒在启动时的有效性。一般情况下，锅炉的极限温控器 (**TL**) 可以保证燃烧器按时停机。否则，应在极限温控器 (**TL**) 上串联一个可以使燃烧器至少每 24 小时停机一次的开关。

图例

C – 电机电容
CN... – 连接器
F1 – 电磁干扰滤波器
MB – 辅助电源接线端子板
MV – 电机
PA – 最低空气压力开关
SM – 伺服电机
SO – 电离探针
S1 – 开关：
MAN = 手动
AUT = 自动
OFF = 停机
S2 – 按钮：
– = 减小出力
+ = 增大出力
TA – 点火变压器
TB – 燃烧器接地
XP4 – 4 孔插座
XP6 – 6 孔插座
XP7 – 7 孔插座

4.2 电气连接 (由安装方负责)

警 告

如果锅炉自带了 7 针插头，应使用随燃烧器附带的 7 针插头替换。

不带比调仪 (高 - 低平滑两段火运行模式)

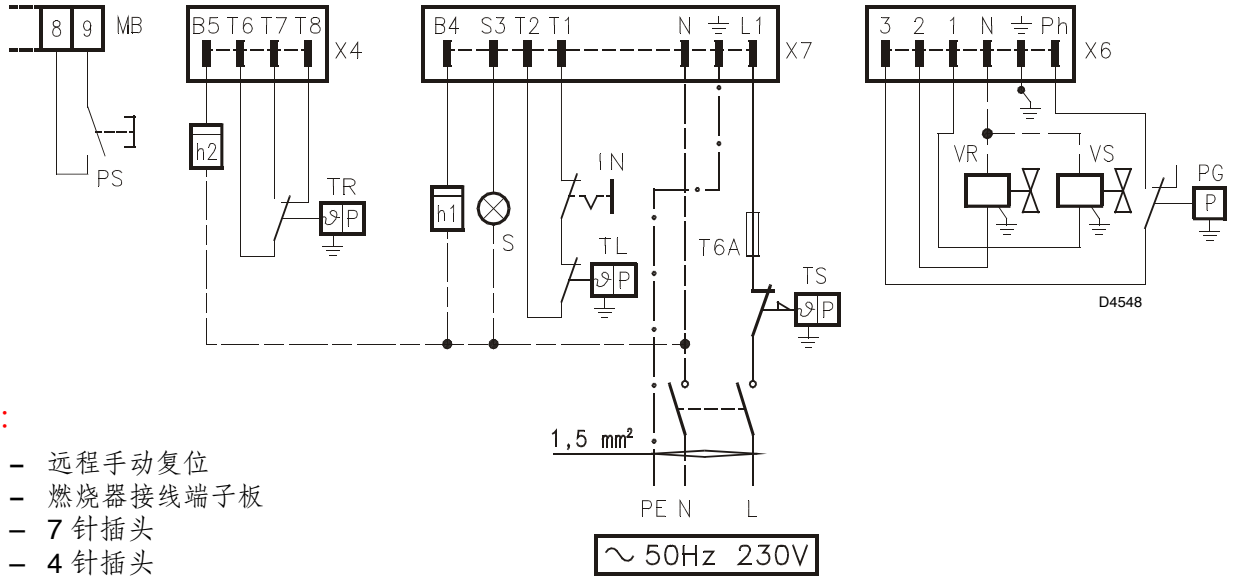

图例：

PS – 远程手动复位
MB – 燃烧器接线端子板
X7 – 7 针插头
X4 – 4 针插头
X6 – 6 针插头
h2 – 2 段火计时器
TR – 高 - 低火模式控制器
h1 – 1 段火计时器
S – 远程锁定信号
IN – 燃烧器手动停止开关

TL – 限位温控器
T6A – 保险丝
TS – 安全温控器
PG – 最低燃气压力开关
VR – 调节阀
VS – 安全阀

带比调仪 (完全比例调节运行模式)

注意事项

不要在 4 针插头的接线端子 **T6** 和 **T8** 之间以及 7 针插头的接线端子 **T1** 和 **T2** 之间连接任何接触器，以避免对比调仪产生干扰。

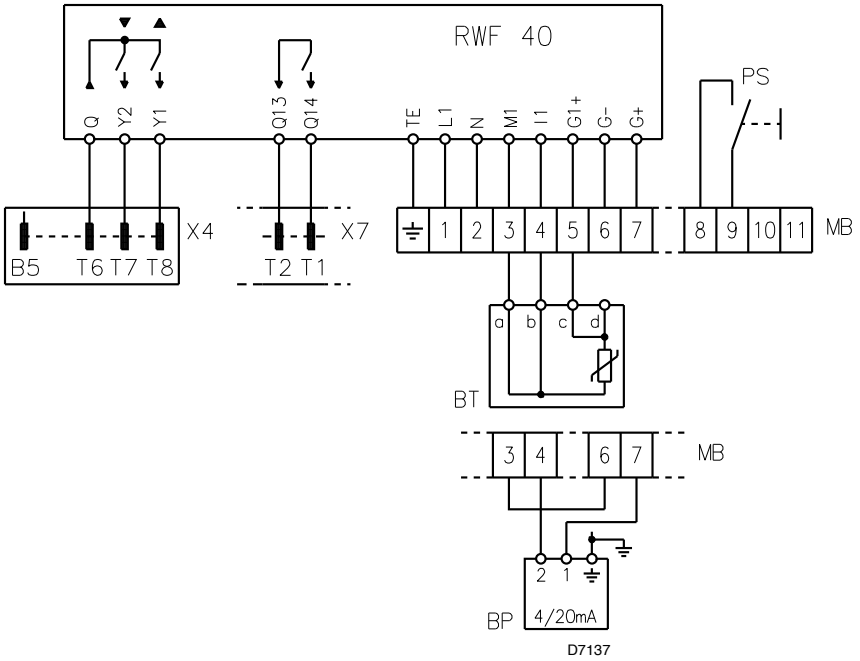

图例 :

PS – 远程手动复位
MB – 燃烧器接线端子板
X4 – 4 针插头
X7 – 7 针插头
BT – 温度探针
BP – 压力探针

5. 运行

5.1 燃烧头调整

锅炉上的燃烧器符合效率指令 92/42/EEC，其调试和测试必须按照锅炉操作手册进行，包括烟气中 CO 及 CO_2 的排放浓度、温度以及锅炉内的平均水温。要满足所需出力要求，请选择适合的燃烧头及伺服电机的设置。

5.2 燃烧头设置 (见图 9)

根据燃烧器出力来调节燃烧头设置。
顺时针或逆时针旋转调节螺丝 (6) 直至调节杆 (2) 上所标示的刻度与燃烧头组件 (1) 外部的平面对齐。
图 9 所示为燃烧头调节杆调节至刻度 3.5。

以 **917M** 型燃烧器为例：
该图作为参考，可以显示燃烧头的设置取决于所需最大出力。为了使燃烧器运行良好，建议根据具体应用来设置燃烧头。
如燃烧器安装在出力为 100 kW 的锅炉上，效率为 90%，燃烧器出力为 110 kW ；根据此出力需求，燃烧头应设置在刻度 3.5 处。

取下燃烧头组件
按下列步骤取下燃烧头组件：
➤ 确定伺服电机 (7) 在关闭位置 (凸轮 **II = 0**)，
➤ 断开连接 (3 和 5)。
➤ 拧松螺丝 (4)，移开伺服电机 (7)。

注意事项
由伺服电机 **(7)** 控制的旋转轴 **(10)** 带有一个安全装置 **(11)**，以防止其在维修过程中突然转动。

➤拧松螺丝(9), 拧松螺丝(8)，向右轻轻转动燃烧头支架 (1) 并将其取下。

注意在拆卸过程中不要改变组件上的设置点刻度。

重新安装燃烧头组件
将上述操作按相反的顺序进行，将燃烧头组件 (1) 重新安装于原来的位置。

注意事项
➤ 上紧螺丝 (9)*(不要锁紧)*；然后将力矩扳手的力矩调整为 3 - 4 Nm，将螺丝锁紧。
➤ 检查在操作过程中，螺丝处是否有燃气泄漏。

图 **9**

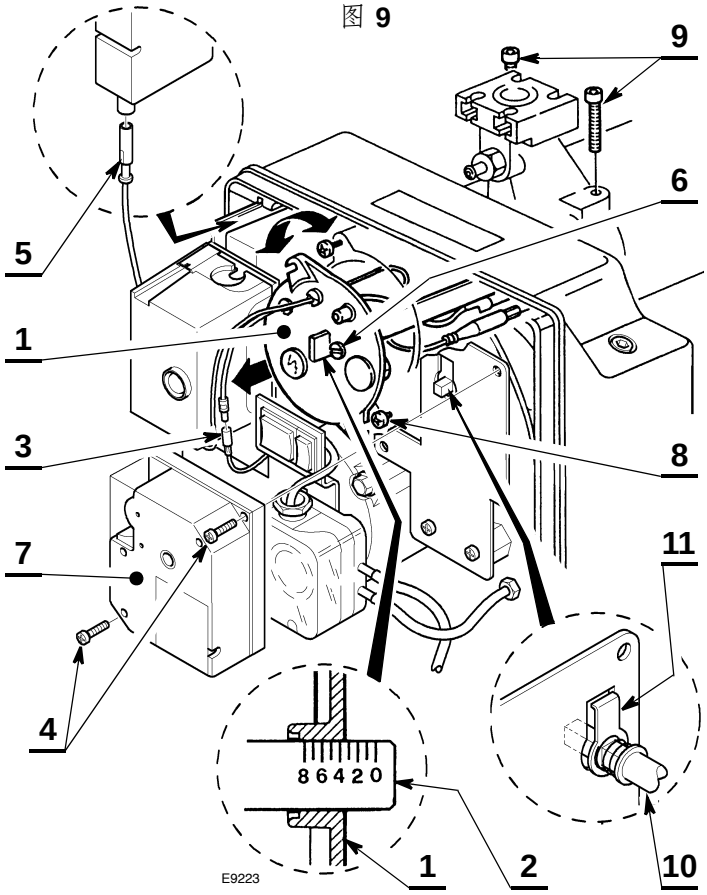

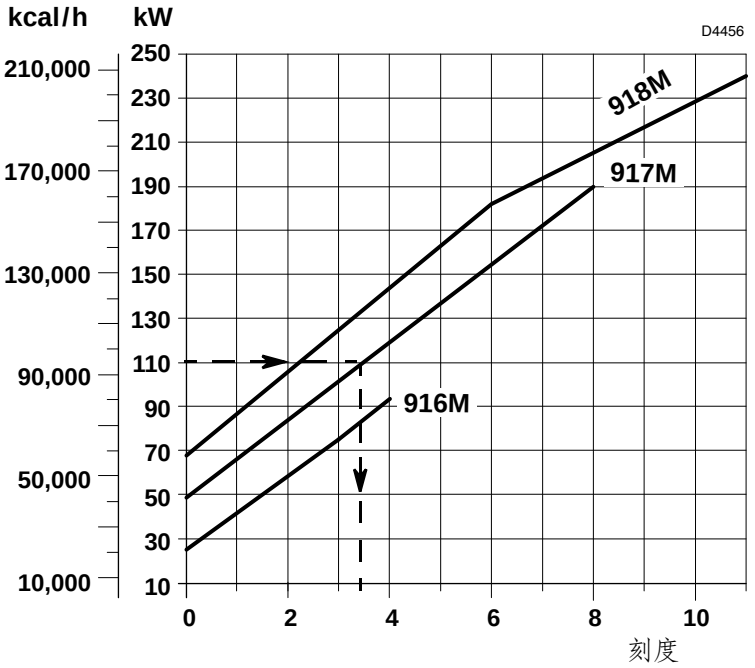

A 如果 917M 和 918M 型燃烧器运行时出力大于给定出力值，则需将隔音罩拆除，露出机器外盖上的排气口，如图 10 所示。

类型	热出力 - kW
917M	> 140
918M	> 200

图 **10**

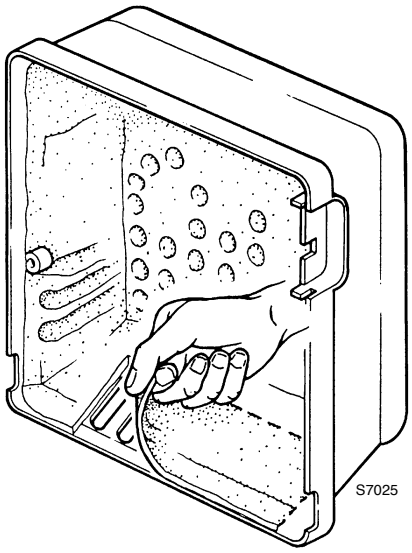

5.3 风门挡板伺服电机设置，(见图 11)

图 **11**

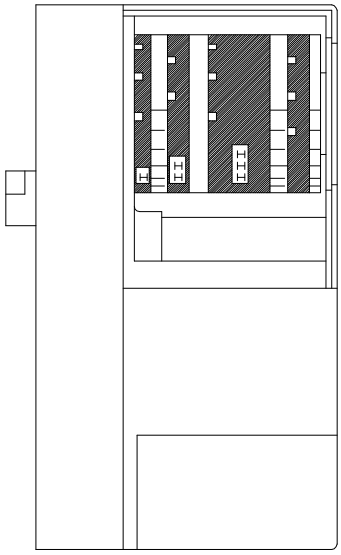

待机 — **凸轮 II**

凸轮 **II** 可保证燃烧器停机（待机）时，风门挡板完全关闭。出厂时，凸轮位置设置为 0°。请勿更改。

1 段火 — **凸轮 III**

凸轮 **III** 可调节点火和最小出力时风门挡板的位置。此凸轮可在使用中进行调节。凸轮 **IV** 与凸轮 **III** 固定。

2 段火 — **凸轮 I**

凸轮 **I** 为最大出力位置。出厂时，设置位置为 90°。不得再增大旋转角度，否则将损坏燃烧器。

当凸轮 **III** 角度变小时，伺服电机随之调整。
如需增大该凸轮角度，则需先通过“增加出力 **(+)**”键增大伺服电机角度，然后再增大凸轮 **III** 角度，最后，通过“减小出力 **(-)**”键，将伺服电机调整至最小出力位置。
如需要，调整凸轮 **III** 时，可先将扣在其上的外盖 (1) 取下，如图 12，取下内部的钥匙 (2) 插入凸轮 **III** 的插槽内。

图 **12**

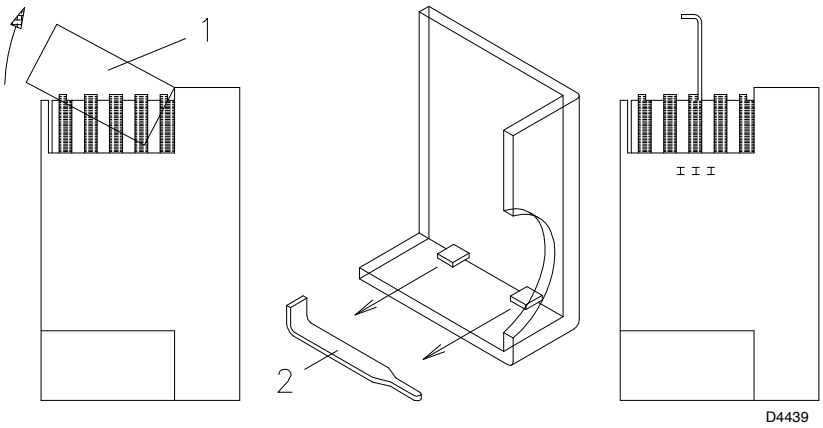

5.4 首次启动，(见图 13 和图 5 页 6)

图 13

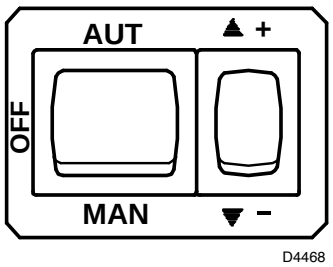

一旦确认电气连接正确，并且燃气管道系统连接正常、无泄漏，则可将空气压力开关置于起始位置。
将压力计连接到燃烧头处的燃气压力测试点上 (**M3**，图 7，页 7)。
下表给出了以天然气为燃料的燃烧器的启动设置。

参考值：
- 点火出力；
- 风门挡板预设位置 (凸轮 **III**) ；
- 燃气阀组预设位置 **0** 点定位螺钉；
- 所使用燃气阀组型号。

类型	点火出力	调整 凸轮 **III**	调整 **0** 点	调整 燃气 **/** 空气 比例	燃气阀组
	kW	设置点	设置点	设置点	型号
916M	26 ÷ 33	20° ÷ 30°	◆	由最大出力决定	**CG 120**
917M	48 ÷ 83	30° ÷ 40°	◆		**CG 220**
918M	68 ÷ 110	30° ÷ 35°	◆		**CG 220**
917M	48 – 83	30° – 40°	0.1 – 0.25	由最大出力决定	**MBC - 300 - VEF**
918M	68 – 110	30° – 35°	-0.7 – -0.5		**MBC - 700 - VEF**

◆ 将值设置在接近刻度起始的位置 (-1.5)。

1 - 根据所需最大出力，按第 10 页所示设置燃烧头。

2 - 选择手动运行模式 **"MAN"**，校准伺服电机凸轮 **III**，如上表所示调整 **0** 点定位螺钉，然后启动燃烧器。

3 - 一旦燃烧器点火，通过手动操作按下 **(+)** 键，将伺服电机运行至 2 段火位置。在此操作过程中，检查火焰状态是否稳定：如果火焰状态不稳，则调整燃气 **/** 空气 比例 设置螺丝，以增加或减少设置值，直至调整至所需最大出力且符合烟气中 **CO_2** 排放标准。随后，设置凸轮 **I** 到伺服电机到达的位置。

4 - 手动操作，按下 **(-)** 键，将伺服电机运行至 1 段火位置。
检查燃烧状态，如必要，可使用 **0** 点设置螺钉调整烟气中 CO_2 排放量至标准值。

5 - 如需调整 1 段火出力，则可调节凸轮 **III**。
对所有 **0** 点设置螺钉的调整将会引起最大燃气量的改变。

6 - 将伺服电机重新置于大火位置，同时再次检查最大出力，调整燃气 **/** 空气 比例设置螺钉。

7 - 再次将伺服电机调至 1 段火位置，再次调整出力水平，同时仅调节 **0** 点设置螺钉。

8 - 重复上述步骤 (6) 和 (7) 直至燃气 **/** 空气 比例以及 **0** 点设置螺钉无需再进行调整。

9 - 检查中间出力时的燃烧情况，如必要，可进一步调整燃气 **/** 空气 比例 以及 **0** 点设置螺钉。
一旦完成上述操作，且燃烧器点火正常，火焰状态稳定，则可选择自动模式，将转换开关置于 **"AUT"** 位置。在凸轮 **III** 的设置位置和凸轮 **I** 的设置位置之间进行比例调节。

5.5 燃烧状态检查

要使安装于锅炉上的燃烧器符合效率指令 92/42/EEC，燃烧器的调整和测试都必须遵照锅炉操作手册进行，包括烟气排放中的 CO 及 CO_2 的浓度、温度以及锅炉中水的平均温度。
建议根据所使用的燃气类型及下表所列参数设置燃烧器：

EN 676		过量空气： 最大出力 λ ≤ **1.2** – 最小出力 λ ≤ **1.3**			
燃气	理论最大 **CO_2** 排放 **0 % O_2**	设置 **CO_2 %** **λ = 1.2**	 **λ = 1.3**	**CO** **mg/kWh**	**NO_x** **mg/kWh**
G 20	11.7	9.7	9.0	≤ 100	≤ 170
G 30	14.0	11.6	10.7	≤ 100	≤ 230
G 31	13.7	11.4	10.5	≤ 100	≤ 230

离子电流

控制盒运行所需的最小电流为 2 μA。
通常情况下，燃烧器提供的电流更大，所以一般不需检查此项。但如果想测量离子电流，必须断开电缆上的连接头 **(CN3)**(见电气连接图第 8 页)，在其中加装一个微安计。

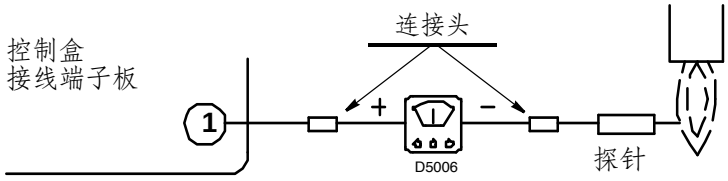

5.6 空气压力开关

在空气压力开关设置于起始位置情况下完成上述所有调试后，进行空气压力开关调整。当燃烧器以最小出力运行时，以顺时针方向缓慢转动旋钮直至燃烧器锁定。接着，将旋钮向逆时针方向旋转至设置值的 20%，查看燃烧器启动是否正常。如果燃烧器再次锁定，则将旋钮继续沿逆时针方向小幅转动。

注意事项：

按照标准，空气压力开关必须保证空气压力不得低于调整值的 80%，以确保烟气中的 CO 排放量不超过 1% (10,000 ppm)。

要检测此项目，需将一个烟气分析仪插入烟囱处，缓慢关闭风机进风口 *(如使用纸板遮挡)*，检查确认烟气中 CO 排放量超过 1% 时燃烧器是否锁定。

5.7 燃气压力开关

燃气压力开关的设置参见燃气阀组说明书。

5.8 燃烧器启动周期

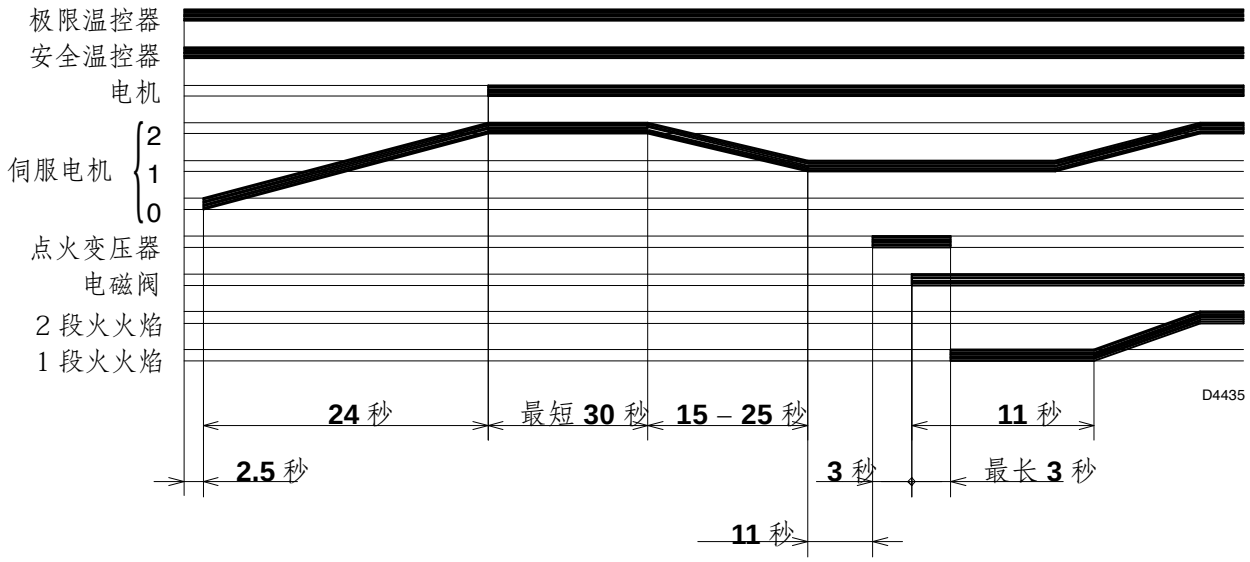

6. 维护

燃烧器需定期由具有资质的技术人员进行检修，并符合当地的强制性规范。
定期检修可保证燃烧器的良好性能，避免燃料的过度消耗以及增加污染物的排放。
在进行任何清洗或操作之前，请务必先切断燃烧器系统主电源开关。

基本维护要求：所需执行的基本操作如下：

- ➤ 定期检查确认燃烧头上的燃气孔没有任何堵塞。如有堵塞，请如图 14 所示，用适当工具清除。
- ➤ 检查确认空气进气区及燃烧废物排放管路的进口及出口上没有任何堵塞。
- ➤ 检查确认燃烧器及燃气阀组的电气连接正确。
- ➤ 检查确认所选燃气阀组与燃烧器型号、燃气类型以及管路燃气压力相匹配。
- ➤ 检查确认燃烧头位置正确，且正确安装于锅炉上。
- ➤ 检查确认风门挡板位置正确。
- ➤ 检查确认离子探针及电极位置正确 (见图 8，页 7)。
- ➤ 检查确认空气压力开关以及燃气压力开关设置正确。

使燃烧器连续稳定运行 10 分钟以便检查 1 段火及 2 段火运行时操作手册中所列所有部件的设置正确。

图 **14**

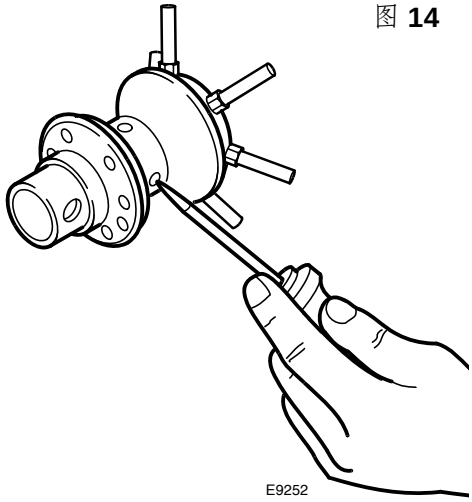

随后执行下列燃烧状态检查，以了解：

- CO_2 比例 (%);
- CO 排放量 (ppm);
- NOx 排放量 (ppm);
- 离子电流 (μA);
- 烟囱处的排烟温度。

7. 故障 / 解决方案

控制盒具有自诊断功能，因此很容易确定故障原因。
要使用这一功能，须等进入锁定状态至少 10 秒之后再按下复位按钮 3 秒。松开按钮后，红色 LED 灯会依下表所述闪烁。

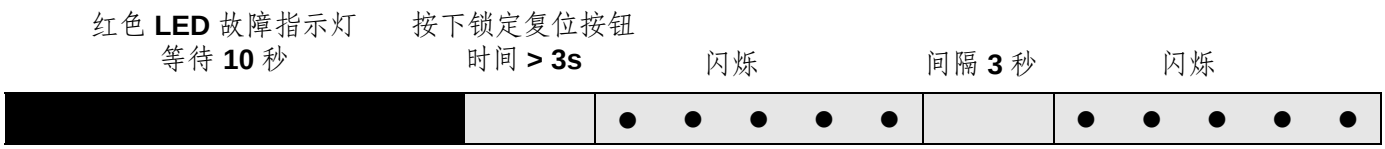

每隔 3 秒， LED 灯会连续闪烁 N 次。
闪烁次数可以提示可能的故障原因，如下表：

闪烁	可能的故障原因
闪烁 2 次 ● ●	安全时间结束后火焰状态不稳定： – 电离探针故障或脏； – 电磁阀故障或脏； – 零线 / 相线接反； – 燃烧器调整不当。
闪烁 3 次 ● ● ●	最低空气压力开关未闭合； – 确认 VPS 是否 跳闸锁定； – 空气压力开关故障； – 空气压力开关调节不当； – 风机电机未运转； – 最大空气压力开关处于运行位置。
闪烁 4 次 ● ● ● ●	预吹扫时外部光线过亮，或控制盒故障。
闪烁 5 次 ● ● ● ● ●	最低空气压力开关未断开； – 空气压力开关故障； – 空气压力开关调节不当。
闪烁 7 次 ● ● ● ● ● ● ●	运行中熄火： – 燃烧器调整不当； – 电磁阀故障或脏； – 电离探针接地造成短路。
闪烁 10 次 ● ● ● ● ● ● ● ● ● ●	控制盒故障。

8. 其它说明

标识
产品上的标识铭牌列出了其序列号、机型以及主要的技术及性能参数。产品因铭牌被涂改、移除或是丢失而无法识别的，会对其安装及维护造成潜在危险。

警告
为保证燃烧的污染物排放最低，锅炉燃烧室的尺寸必须达到一个特定值。
因此建议用户在为锅炉选配此型号燃烧器之前咨询我公司技术支持部。
此燃烧器必须且只能用于专为其设计的用途。
如果由于燃烧器错误安装及调试、非正常使用、未按产品所附技术手册操作以及无操作资质人员操作所造成的任何人、畜及财产损失，制造商不承担任何责任。

用户须知
若在点火及运行过程中发生故障，燃烧器会启动“安全停机”模式，此时燃烧器红色 Led 锁定指示灯亮。要重新启动燃烧器，需按下复位按钮。
燃烧器重新启动后，红色 Led 指示灯熄灭。此操作最多可重复 3 次。
如“安全停机”再次发生，需联系我们的技术支持中心。

基本安全规程
- ➤ 儿童及非专业人士禁止使用该设备。
- ➤ 在任何情况下，禁止使用布、纸及其它任何材料堵塞设备安装室的进气格栅、排气格栅及通风孔。
- ➤ 非认证人员不得对设备进行维护维修。
- ➤ 抽拉及缠绕电线危险。
- ➤ 对设备的清洗必须在主电源断开之后进行。
- ➤ 不得用易燃物（如汽油、酒精等）清洁燃烧器及其部件。设备外盖必须用肥皂水清洗。
- ➤ 不得在燃烧器上放置物品。
- ➤ 不得堵塞设备安装室内通风孔或缩小其尺寸。
- ➤ 不得将各类容器及易燃物遗留于设备安装室内。

Registered Office - 公司注册所在地：
RIELLO S.p.A.
I-37045 Legnago (VR)
Tel.: +39.0442.630111
http:// www.riello.it
http:// www.rielloburners.com

Manufacturing site:
Riello Heating Equipment (Shanghai) CO., LTD
No. 388, Jinbai Road - Jinshan Industrial Zone
201506 - Shanghai
CHINA

生产场所：
Riello Heating Equipment (Shanghai) CO., LTD
利雅路热能设备（上海）有限公司
上海市金山工业区金百路 388 号

Subject to modifications - 保留更新的权利