Installation, use and maintenance instructions
安装、使用及维护手册

RIELLO

GB **Forced draught gas burner**

CN 强制通风燃气燃烧器

Modulating operation
比例调节运行

Gulliver

CODE - 编码	MODEL - 型号	TYPE - 类型
20050820	BS3/M TXL	917T2

20050873 (1) - 05/2012

Declaration of conformity in accordance with ISO / IEC 17050-1		
Manufacturer:	RIELLO S.p.A.	
Address:	Via Pilade Riello, 7 37045 Legnago (VR)	
Product:	Gas burner	
Model:	BS3/M TXL	
These products are in compliance with the following Technical Standards:		
EN 676		
EN 12100		
and according to the European Directives:		
MD	2006/42/EC	Machine Directive
LVD	2006/95/EC	Low Voltage Directive
EMC	2004/108/EC	Electromagnetic Compatibility
Such products are marked as follows:		

The quality is guaranteed by a quality and management system certified in accordance with UNI EN ISO 9001.

Legnago, 16.04.2012

Mr. G. Conticini
Burners Division Department
RIELLO S.p.A.

CONTENTS

1. BURNER DESCRIPTION

One stage gas burner.

- ➤ The burner meets protection level of IP X0D (IP 40), EN 60529.
- ➤ Gas train according to EN 676.
- ➤ The burner is approved for intermittent operation as per Directive EN 676.
- ➤ **Note for Switzerland.** Swiss provisions, local and cantonal provisions, the provisions of the SVGW authorites for the use of gas, as well as those of the Fir Brigade (VKF), must all be complied with.

Fig. 1

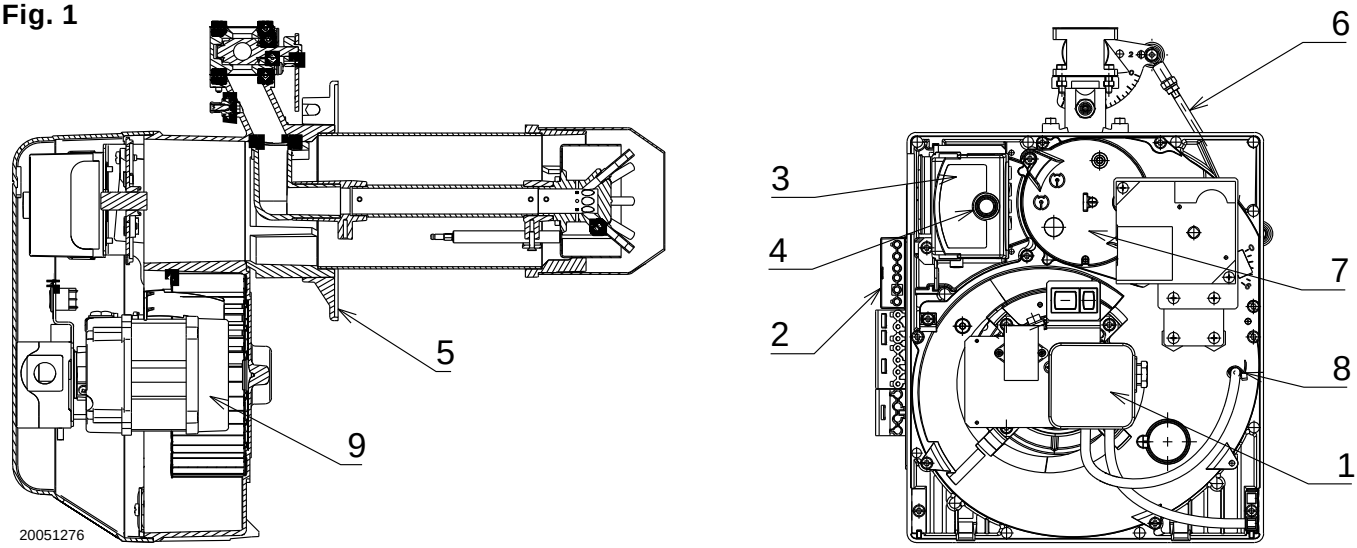

1 – Air pressure switch
2 – 6 pole socket for gas train
3 – Control box
4 – Reset button with lock-out lamp
5 – Flange with insulating gasket
6 – Air damper adjustment assembly
7 – Head holder assembly
8 – Pressure test point
9 – Motor

1.1 BURNER EQUIPMENT

Flange with insulating gasket. . . . . No. 1
Screw and nut for flange . . . . . No. 1
7 pin plug . . . . . No. 1
Screws and nuts for flange to be fixed to boiler . . . No. 4
4 pin plug. . . . . .No. 1

2. TECHNICAL DATA

2.1 TECHNICAL DATA

TYPE		917T2
Thermal power **(1)**	kW	25 – 200
	Mcal/h	21.5 – 172
Natural gas **(Family 2)**		Net heat value: 8 – 12 kWh/m^3 = 7000 – 10,340 kcal/m^3
		Pressure: min. 20 mbar – max. 360 mbar
Electrical supply		Single phase, 230V ± 10% ~ 50Hz
Motor		Run current 1.8A 2800 rpm 294 rad/s
Capacitor		6.3 μF
Ignition transformer		Primary 230V / 0.2A – Secondary 8 kV / 12 mA
Absorbed electrical power		0.35 kW
(1) Reference conditions: Temp. 20°C - Barometric pressure 1013 mbar – Altitude 0 m above sea level.		

For gas family 3 (LPG) ask for separate kit.

COUNTRY			AT - IT - DK - CH	GB - IE	DE	FR	NL	LU - PL	BE
GAS CATEGORY			II2H3B/P	II2H3P	II2ELL3B/P	II2Er3P	II2L3B/P	II2E3B/P	I2E(R)B,I3P
GAS PRESSURE	G20	H	20	–	–	–	–	–	–
	G25	L	–	25	20	–	25	25	–
	G20	E	–	–	20	20/25	–	20	20/25

2.2 OVERALL DIMENSIONS

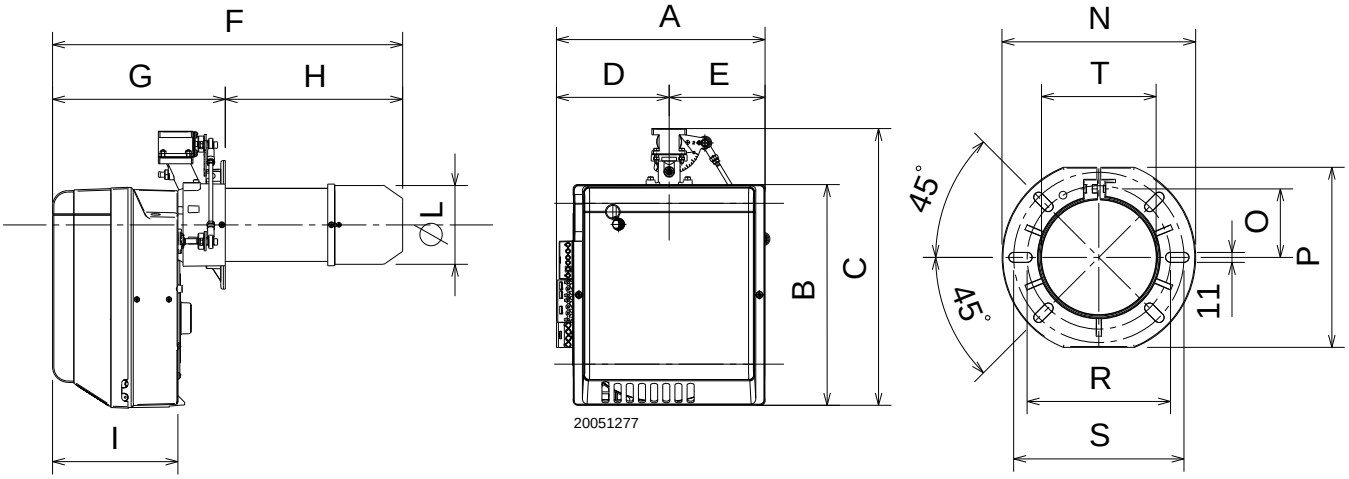

TYPE	A	B	C	D	E	F	G	H	I	L - T	M	N	O	P	R	S
917T2	330	345	391	150	150	550	322 – 337	282 – 267	196	129	285	216	76.5	201	160	190

2.3 FIRING RATE

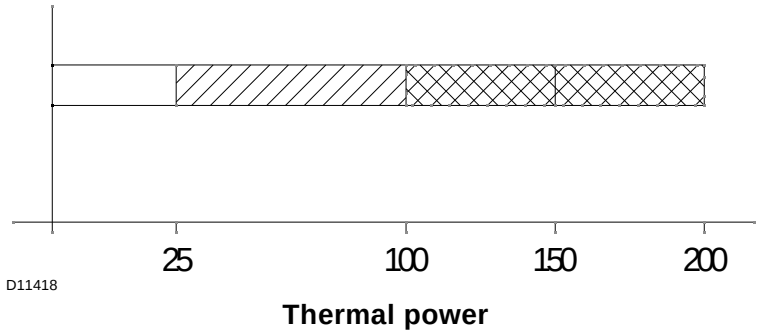

TEST BOILER

The firing rate has been defined according to EN 676 standard.

COMMERCIAL BOILERS

The burner-boiler matching is assured if the boiler conforms to EN 303 and the combustion chamber dimensions are similar to those shown in the diagram EN 676.
For applications where the boiler does not conform to EN 303, or where the combustion chamber is much smaller than the dimensions given in EN 676, please consult the manufacturers.

CORRELATION BETWEEN GAS PRESSURE AND BURNER OUTPUT

To obtain the maximum output, a gas head pressure of 10.5 mbar, is measured (**M2**, see chapter 3.6, page 7) with the combustion chamber at 0 mbar using gas G20 with a net heat value of 10 kWh/m3 (8.570 kcal/m3).

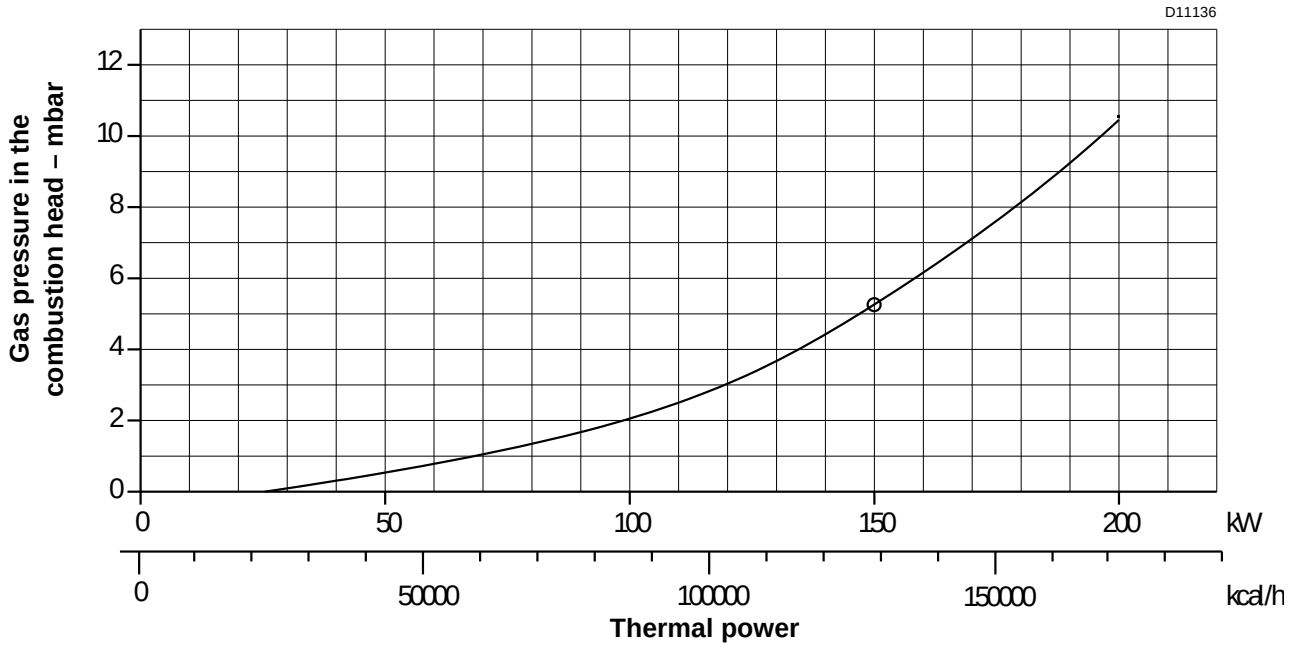

3. INSTALLATION

WARNING

The installation of the burner must be carried out by qualified personnel, as indicated in this manual and in compliance with the standards and regulations of the laws in force.

3.1 WORKING POSITION

The burner is designed for operation in position **1** only.
Installation in positions **2, 3, 5, 6** and **7** is not recommended as it is likely to hinder the unit's proper operation since air damper closure cannot be guaranteed when the burner is on standby.
Installation in position **5** is only possible using the "MULTIBLOC rotation kit", to be ordered separately.
Installation **4** is prohibited as safety is compromised.

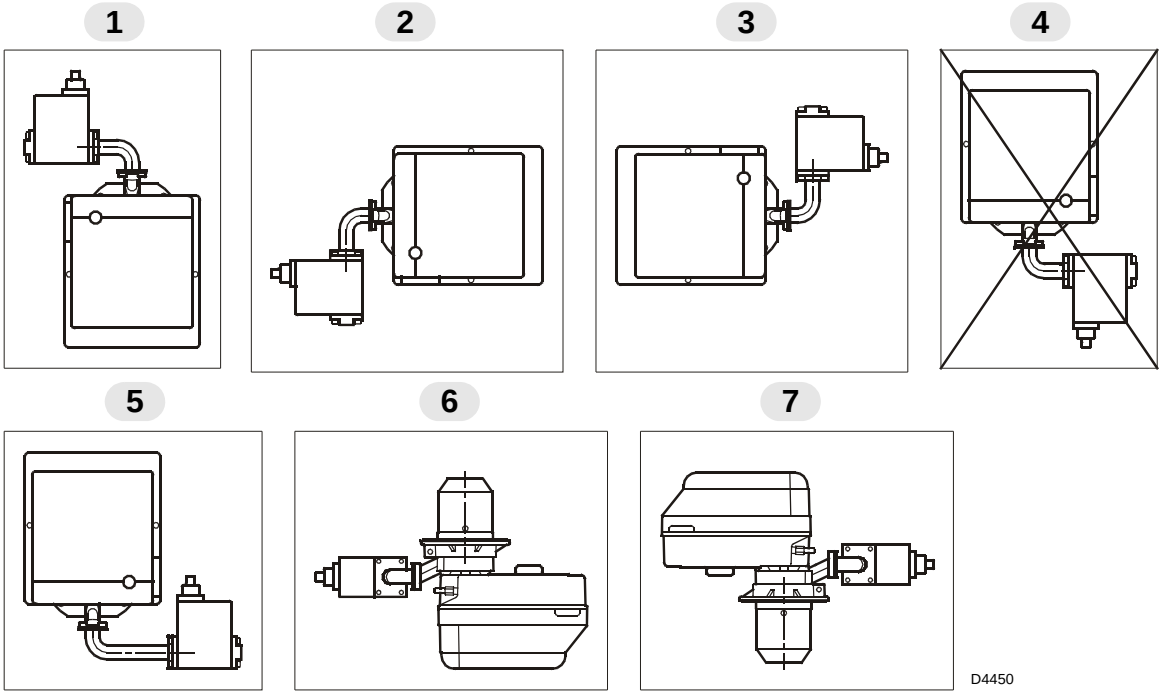

3.2 BOILER FIXING

To fit the burner to the boiler it is necessary to carry out the following:

➤ Widen, if necessary, the insulating gasket holes (3, fig. 3).

➤ Fix the flange (5) to the boiler door (1) using four screws (4) and (if necessary) the nuts (2) **interposing the insulating gasket (3)** but keep unloosing one of the two upper screws (4) (see fig. 2).

➤ Put on the flange (5) the burner combustion head, tighten the flange with the screws (6) and lock the loose screw (4).

N.B.: The burner can be fixed with the variable dimension **(A)** (see fig. 4). Anyway, make sure that the combustion head crosses completely the boiler door thickness.

Fig. 2

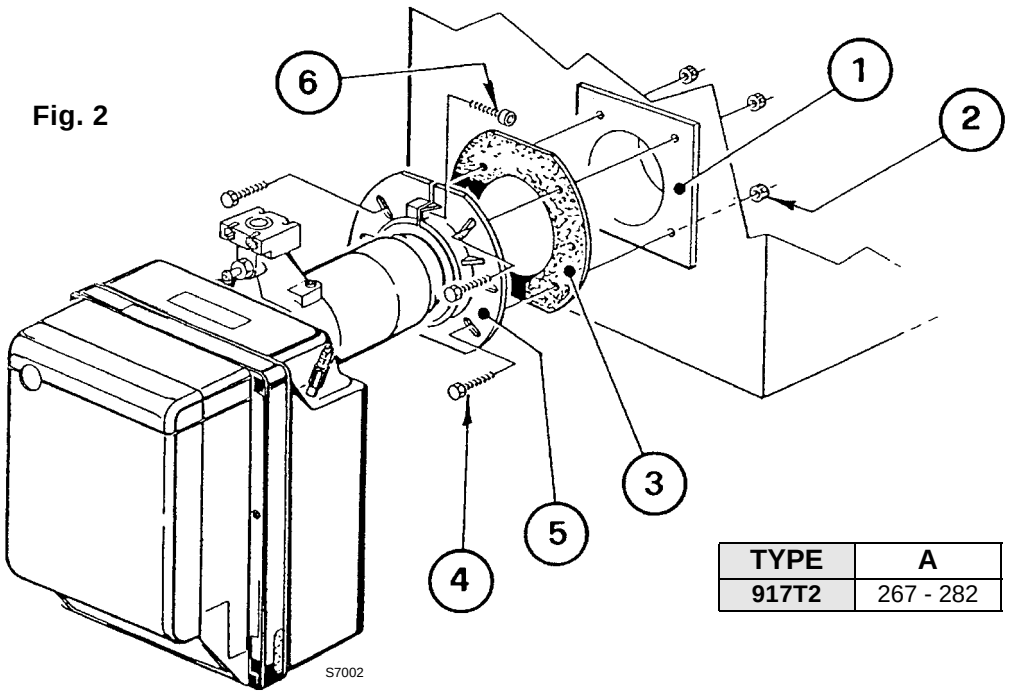

Fig. 3

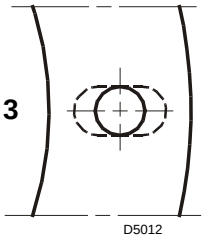

Fig. 4

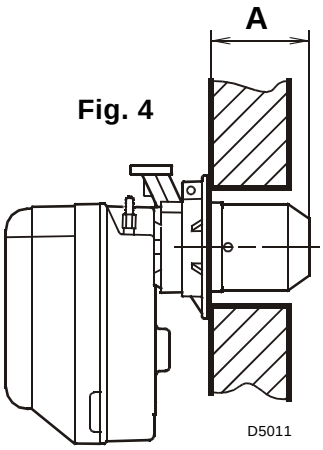

TYPE	A
917T2	267 - 282

3.3 PROBE-ELECTRODE POSITIONING

ATTENTION

➤ Ensure that the plate (3, fig. 5) is always inserted in the flattening of the electrode.

➤ Lean the probe insulator (4) against the cup (2).

Fig. 5

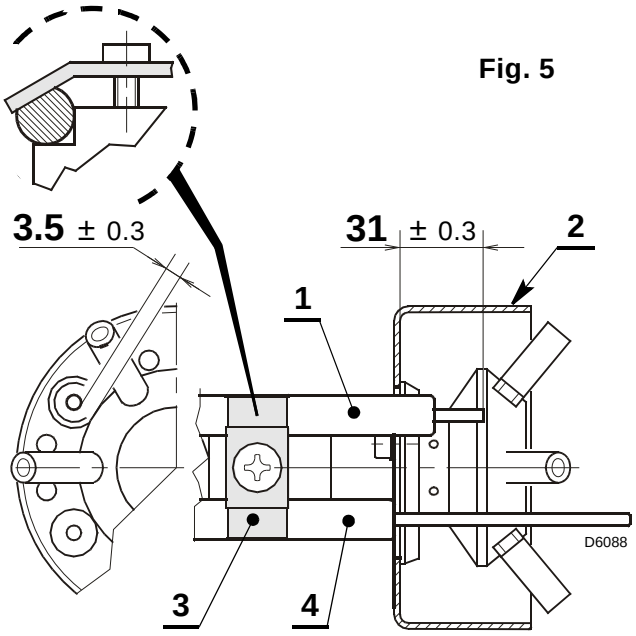

3.4 GAS TRAIN, (as EN 676)

The gas train is supplied separately, for its adjustment see the enclosed instructions.

GAS TRAIN		MATCHED BURNER	CONNECTIONS		USE
TYPE	CODE		INLET	OUTLET	
MBDLE 407 B01	3970548	BS3 - BS4	Rp 3/4	Flange 3	Natural gas ≤ 150kW and LPG
MBDLE 410 B01	3970549	BS3/M	Rp 1 1/4	Flange 3	Natural gas and LPG
MBDLE 412 B01	3970550	BS3/M	Rp 1 1/4	Flange 3	Natural gas

3.5 GAS TRAIN ELECTRICITY SUPPLY

The gas train's power cables can be fed to the right or left of the burner, as illustrated in figure 6.
Depending on the entry point, the cable clamp with pressure test point (1) and simple cable clamp (2) may need swapping over.

Consequently, you must make sure:
- ➤ the cable clamp (1) is positioned correctly;
- ➤ the tube is positioned correctly so that there are no restrictions likely to impede air flowing to the pressure switch.

WARNING
If necessary, cut the tube to the right size.

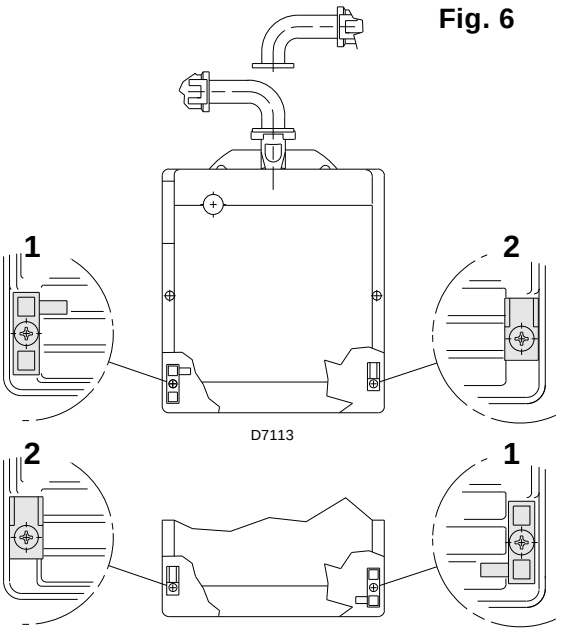

Fig. 6

3.6 GAS FEEDING LINE

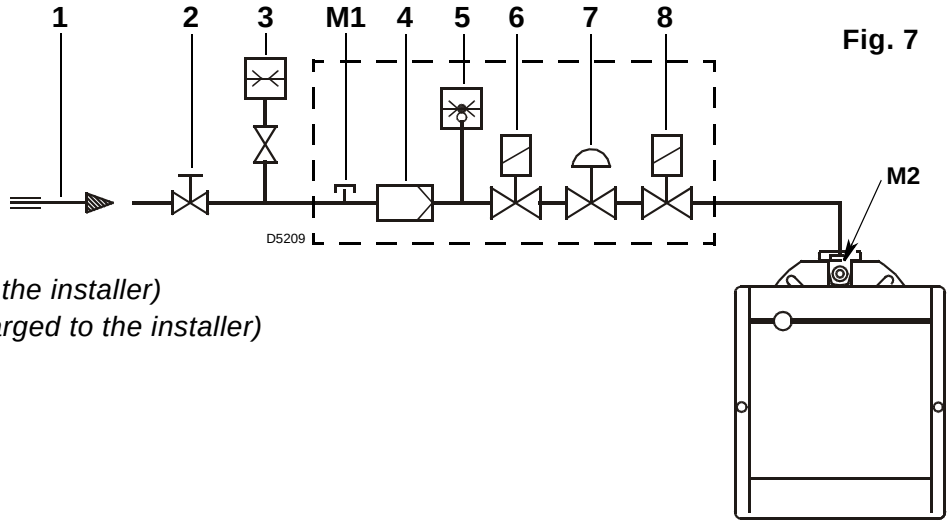

Fig. 7

1 – Gas supply pipe
2 – Manual cock *(charged to the installer)*
3 – Gas pressure gauge *(charged to the installer)*
4 – Filter
5 – Gas pressure switch
6 – Safety valve
7 – Pressure governor
8 – Adjusting valve
M1 – Gas-supply pressure test point
M2 – Pressure coupling test point

3.7 STANDARD ELECTRICAL SYSTEM, (as set up by the manufacturer)

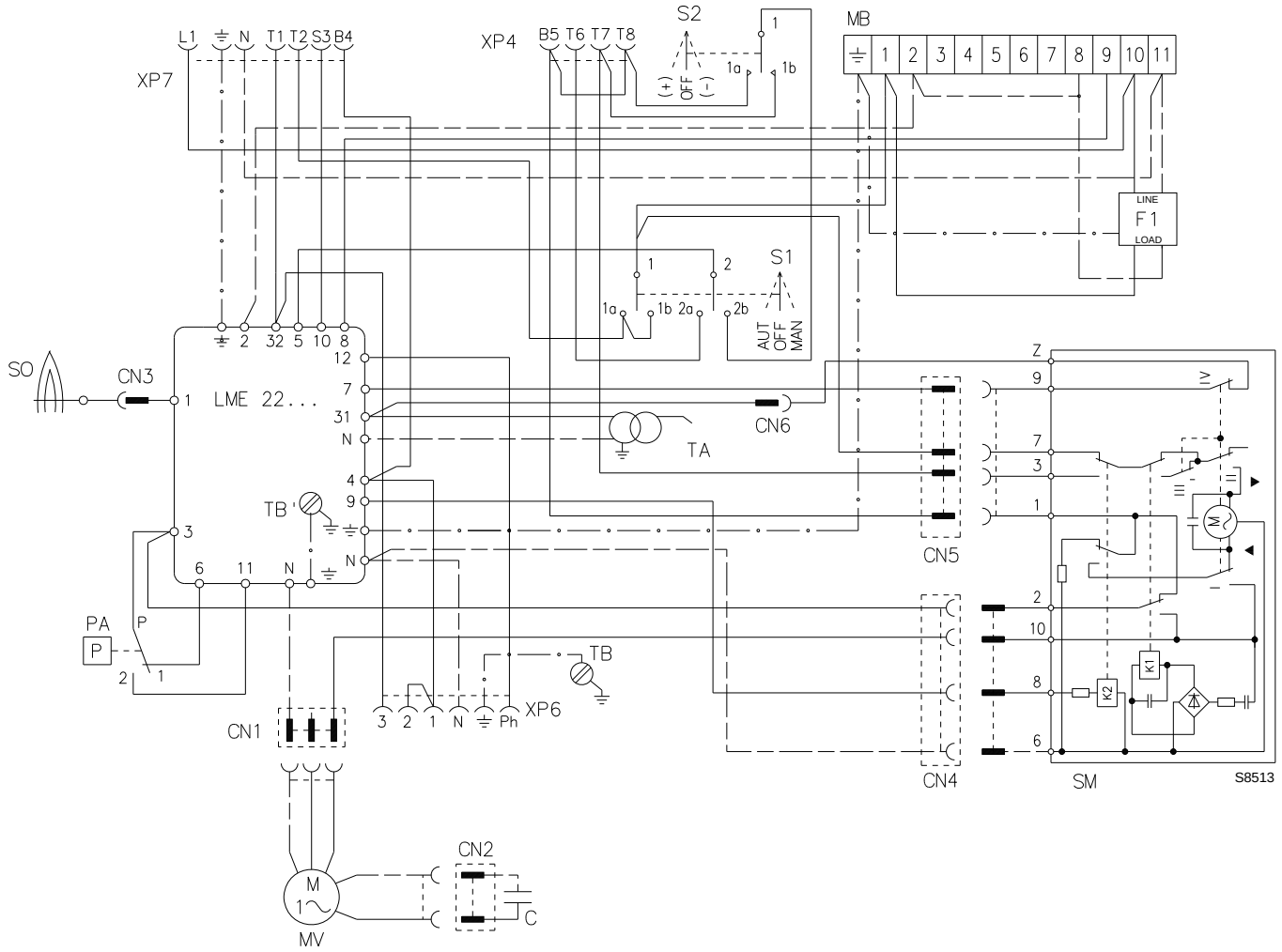

ATTENTION:

- ➤ **Do not swap neutral and phase over, follow the diagram shown carefully and carry out a good earth connection.**
- ➤ The section of the conductors must be at least 1mm². *(Unless requested otherwise by local standards and legislation).*
- ➤ The electrical wiring carried out by the installer must be in compliance with the rules in force in the country.

TESTING

Check the shut-down of the burner by opening the thermostats, and the lock-out by opening the connector (**CN3**) inserted in the red cable of the probe placed outside of the control box.

NOTES

The burners have been type-approved for intermittent operation. This means they must stop at least once every 24 hours in order to allow the electrical control box to check its efficiency on start-up. The boiler limit thermostat (**TL**) normally ensures the burner halts. If this does not happen a time switch halting the burner at least once every 24 hours must be applied in series to limit thermostat (**TL**).

Key to lay-out

C – Motor capacitor
CN... – Connectors
F1 – Suppressor
MB – Auxiliary terminal block
MV – Motor
PA – Min. air pressure switch
SM – Servomotor
SO – Ionisation probe
S1 – Switch for:
MAN = manual operation
AUT = automatic operation
OFF = stand by
S2 – Button for:
– = power reduction
+ = power increase
TA – Ignition transformer
TB – Burner-earth
XP4 – 4 pole socket
XP6 – 6 pole socket
XP7 – 7 pole socket

3.8 ELECTRICAL CONNECTION (As set up by the installer)

WARNING

If the boiler has a the 7 pin plug, it should be replaced with the one supplied with the burner.

WITHOUT REGULATOR (high-low progressive mode operation)

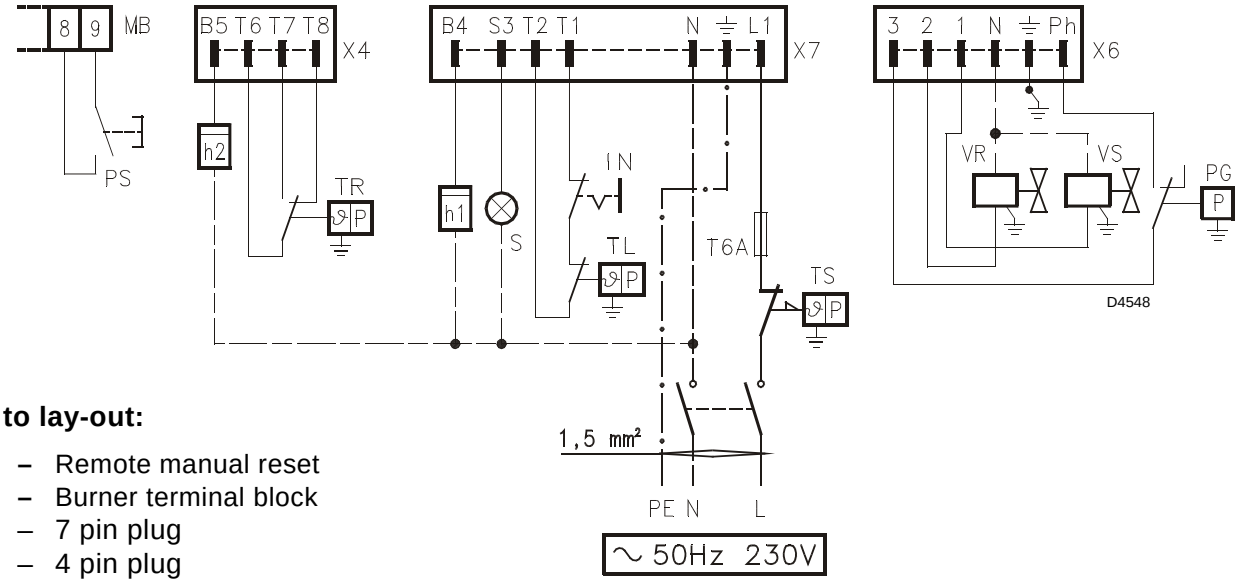

Key to lay-out:

PS – Remote manual reset
MB – Burner terminal block
X7 – 7 pin plug
X4 – 4 pin plug
X6 – 6 pin plug
h2 – 2nd stage hourcounter
TR – High-low mode control device system
h1 – 1st stage hourcounter
S – Remote lock-out signal
IN – Manual burner stop switch

TL – Limit control device system
T6A – Fuse
TS – Safety control device system
PG – Min. gas pressure svitch
VR – Adjustment valve
VS – Safety valve

WITH REGULATOR (fully modulating mode operation)

ATTENTION

Do not connect any contact between **T6** and **T8** at the 4 pin plug and between **T1** and **T2** at the 7 pin plug, in order to avoid interference with the regulator.

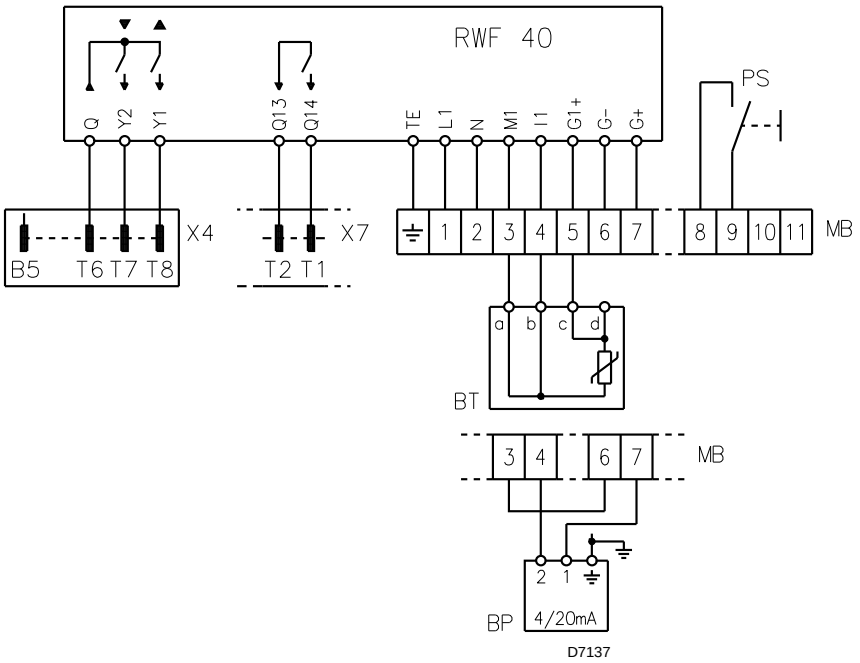

Key to lay-out:

PS – Remote manual reset
MB – Burner terminal block
X4 – 4 pin plug
X7 – 7 pin plug
BT – Temperature probe
BP – Pressure probe

4. WORKING

4.1 COMBUSTION ADJUSTMENT

In conformity with Efficiency Directive 92/42/EEC the application of the burner on the boiler, adjustment and testing must be carried out observing the instruction manual of the boiler, including verification of the CO and CO_2 concentration in the flue gases, their temperatures and the average temperature of the water in the boiler.
To suit the required appliance output, choose the proper setting of the combustion head, and the air damper opening.

4.2 COMBUSTION HEAD SETTING, (see fig. 9)

The combustion head leaves the factory set for the maximum output (set point 8).
Setting depends on the output of the burner. Rotate the setting screw (6) in a clockwise or anticlockwise direction until set point marked on the regulating rod (2) is level with the outside plane of the head assembly (1).
Figure 9 shows the head regulating rod set on set point **3**.

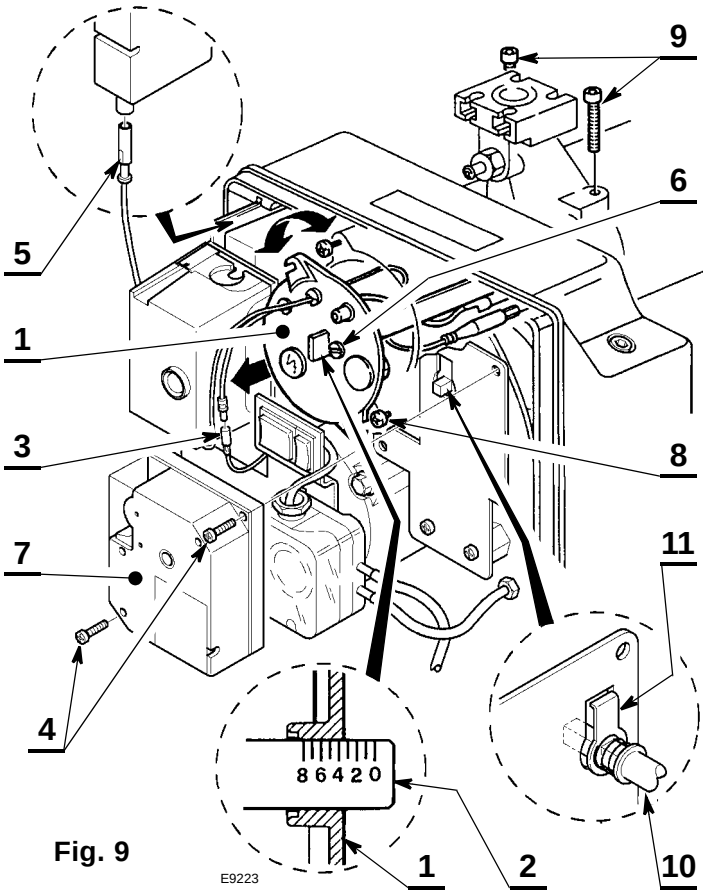

Fig. 9

REMOVING THE HEAD ASSEMBLY

To remove the head assembly, carry out the following operations:

- ➤ Make sure servomotor (7) is in the closing position (**CAM II = 0**).
- ➤ Disconnect the connections (3 and 5).
- ➤ Loosen the screws (4) and remove the servomotor (7).

ATTENTION

Rotation shaft (10) managed by the servomotor (7) features a safety mechanism (11) that prevents it turning accidentally whilst maintenance work is in progress.

- ➤ Loosen the screw (9), loosen screws (8) and remove head-holder assembly (1) by rotating slightly to the right.

Take care not to alter the regulating rod-elbow (2) position while disassembling.

REASSEMBLY OF THE HEAD SYSTEM

Refit following the above procedure in the reverse order, restoring the head assembly (1) to its original position.

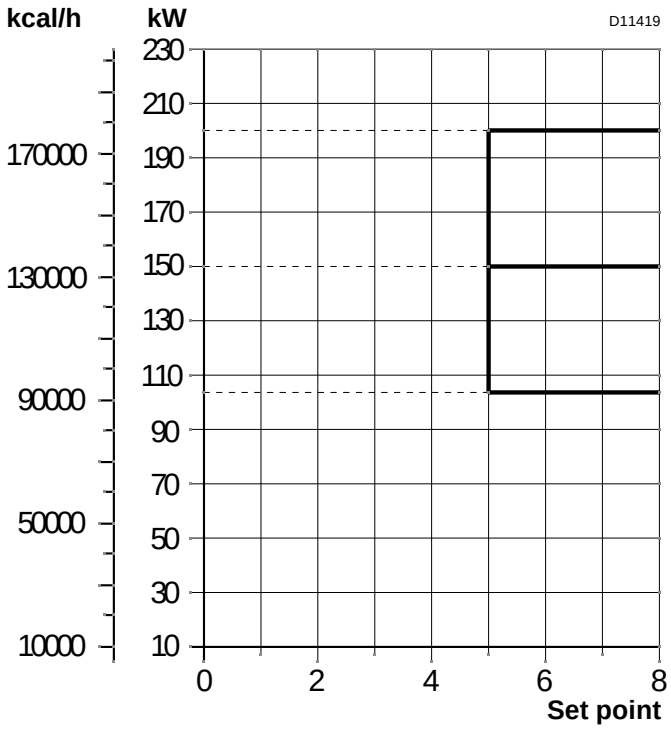

ATTENTION

- ➤ Tighten the screws (9) *(without locking them)* completely; then lock them with a torque wrench setting of 3 - 4 Nm.
- ➤ Control that, during the working, there are not gas losses coming from the screws.

A For the burner to operate over 140 kW, you must remove the blank deadening to free the supplementary slits of the air inlet on the cover, as illustrated in figure 10.

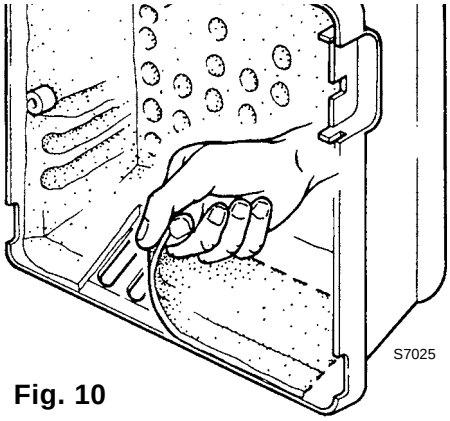

Fig. 10

4.3 SETTING OF THE AIR DAMPER SERVOMOTOR, (see fig. 11)

STAND-BY — **CAM II**

CAM II assures the fully closed position of the air damper, when the burner is shut down (stand by). It is adjusted by the factory at 0°. **DO NOT ALTER**.

FIRST STAGE — **CAM III**

CAM III adjusts the air damper for the ignition and for the minimum output. It can be adjusted whilst it is being put into service. **CAM IV** is integral with **CAM III**.

SECOND STAGE — **CAM I**

CAM I regulates the position of the air damper when the burner is working at maximum output, and must be used to limit the burner delivery (adapting it to the boiler delivery). It is factory-regulated at 90°.

Fig. 11

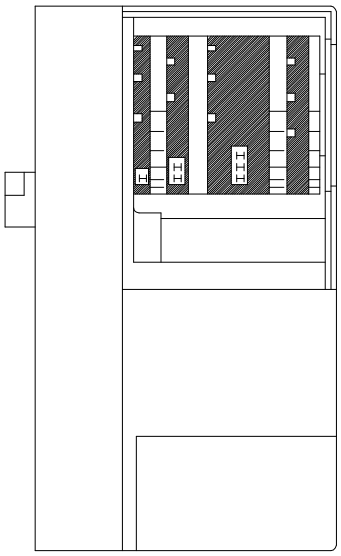

The servomotor only follows adjustment of **CAM III** when the cam's angle is reduced.

If the cam's angle needs increasing, you must first increase the servomotor angle with the "increase output **(+)**" key, then increase the angle of **CAM III** and, lastly, return the servomotor to the MIN output position with the "decrease output **(-)**" key.

Where necessary, **CAM III** can be adjusted by removing cover (1), which is snapped on, as illustrated in fig. 12, removing the relevant key (2) from inside, and inserting it in the slot on **CAM III**.

Fig. 12

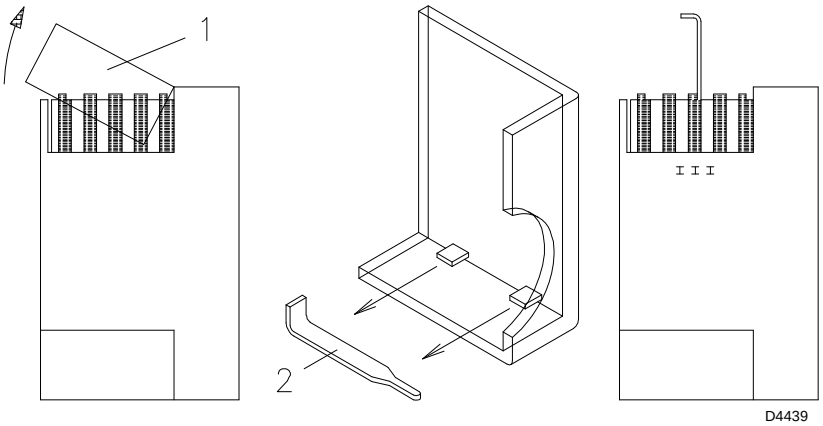

4.4 BURNER ADJUSTMENTS

The tie rod connecting the two air-gas levers, can be fixed on 3 positions according to the modulating requirements. The factory setting foresees that the tie rod is fixed on both levers in position 1.

Fig. 13

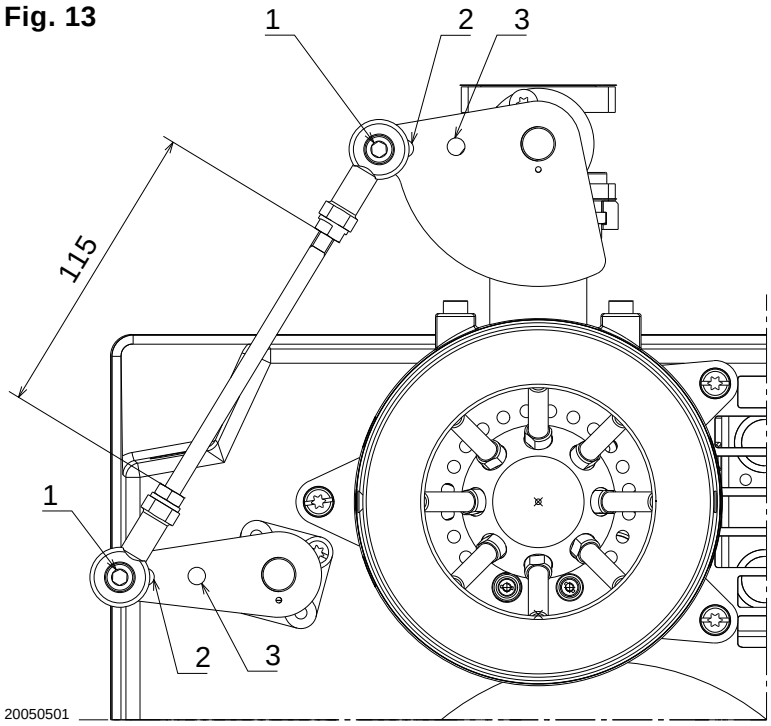

Output (kW)	Gas pressure - M2 (mbar)	Combustion head setting	Servomotor setting	
			Min.	Max.
100	2,2	5	20%	55%
150	5,5	5	20%	75%
200	10,5	5	20%	100%

The value with back pressure in combustion chamber at a 0 mbar. In case of lower or higher back pressure values, act on the adjustment of the combustion head.

Factory setting			Servomotor setting	
Output (kW)	Gas pressure - M2 (mbar)	Combustion head setting	Min.	Max.
100	2,3	8	20%	55%
150	6	8	20%	75%
200	11	8	20%	100%

The value with back pressure in combustion chamber at a 1 mbar. In case of lower or higher back pressure values, act on the adjustment of the combustion head.

ATTENTION

You can obtain the adjustment of the intermediate maximum output (100 and 150 kW), than the maximum absolute of 200 kW, limiting the cam I opening of the servomotor.
By means of this adjustment, the indication of the servomotor position will show the partial load. Therefore, the PLC software will foresee the possibility “to decrease" this indication according to the necessity.

CHECK OF THE COMBUSTION PERFORMANCE CARRIED OUT IN LABORATORY

A	B	C												D
		200	170	150	140	120	110	90	80	60	40	30	25	
0 mbar	CO_2	9,7	9,7		10,1		10,1		9,8		7,1		8,8	5
	CO	1	1		1		1		1		24		23	
0 mbar	CO_2			9,9			10,1			8,8			8,8	5
	CO			1			1			1			23	
1 mbar	CO_2	9,9	10,1		10,4		10,5		10		7,1		8,5	8
	CO	3	3		4		6		4		34		11	
1 mbar	CO_2			10,3		10,5		10,2		9,1			8,5	8
	CO			3		4		4		3			11	

A Pressure in combustion chamber
B CO_2 = % - CO = ppm
C Output kW
D Combustion head set point
***** Burner without cover

4.5 COMBUSTION CHECK

In conformity with Efficiency Directive 92/42/EEC the application of the burner on the boiler, adjustment and testing must be carried out observing the instruction manual of the boiler, including verification of the CO and CO_2 concentration in the flue gases, their temperatures and the average temperature of the water in the boiler.
It is advisable to set the burner according to the type of gas used and following the indications of the table:

EN 676		AIR EXCESS: max. output $\lambda \leq 1.2$ – min. output $\lambda \leq 1.3$			
GAS	Theoretical max. CO_2 0 % O_2	Setting CO_2 % $\lambda = 1.2$	$\lambda = 1.3$	CO mg/kWh	NO_x mg/kWh
G 20	11.7	9.7	9.0	≤ 100	≤ 170
G 30	14.0	11.6	10.7	≤ 100	≤ 230
G 31	13.7	11.4	10.5	≤ 100	≤ 230

IONIZATION CURRENT
The minimum current necessary for the control box operation is 2 µA.
The burner normally supplies a higher current value, so that no check is needed. Anyway, if you want to measure the ionization current, you have to open the connector **(CN3)**, (see electrical scheme page 8) fitted on the wire and insert a microammeter.

Fig. 14

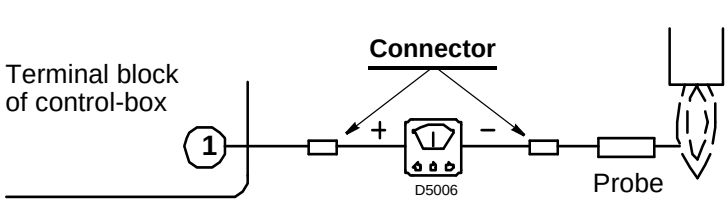

4.6 AIR PRESSURE SWITCH

Adjust the air pressure switch once you have performed all the other burner adjustments with the air pressure switch set to the start of the scale. With the burner operating at minimum output, turn the knob slowly clockwise until the burner locks out. Next, turn the knob anticlockwise by a value of approx. 20% of the set value and then make sure the burner starts properly. If the burner locks out again, turn the knob just a bit further anticlockwise.

Attention:
As a rule, the air pressure switch must prevent the air pressure from lowering below 80% of the adjustment value as well as preventing the CO in the fumes from exceeding 1% (10,000 ppm).
To check this, insert a combustion analyser into the chimney, slowly close the fan suction inlet *(for example with cardboard)* and check that the burner locks out, before the CO in the fumes exceeds 1%.

4.7 GAS PRESSURE SWITCH

For the gas pressure switch setting see the gas train instruction manual.

4.8 BURNER START-UP CYCLE

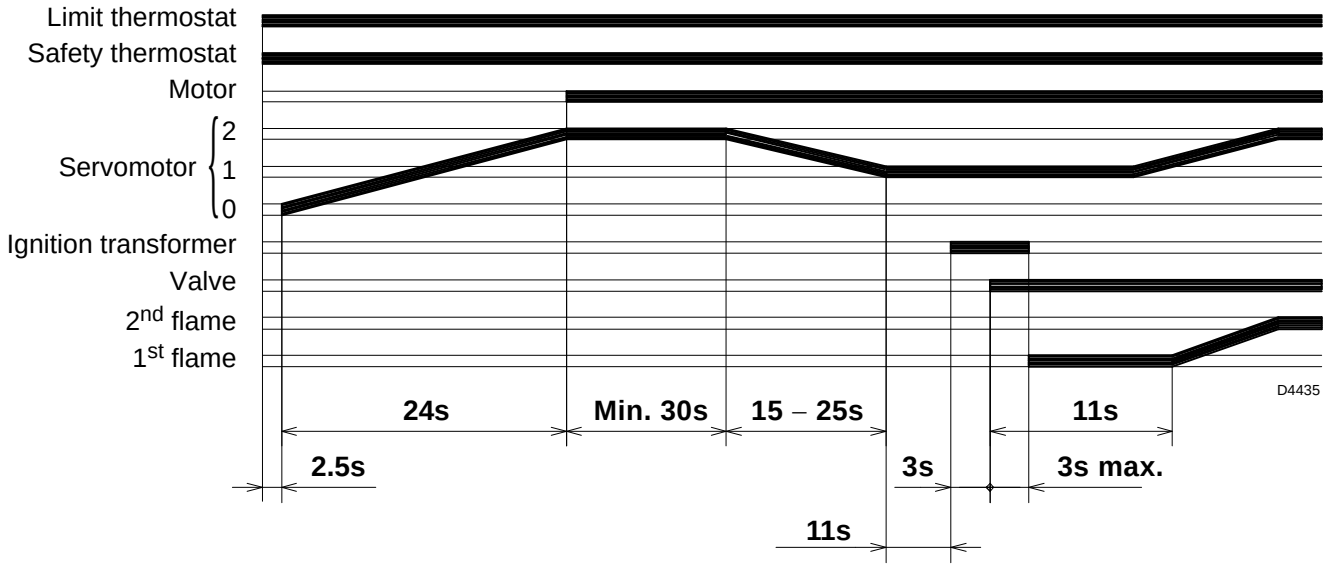

5. MAINTENANCE

The burner requires periodic maintenance carried out by a qualified and authorised technician **in conformity with legislation and local standards.**

Maintenance is essential for the reliability of the burner, avoiding the excessive consumption of fuel and consequent pollution.

Before carrying out any cleaning or control always first switch off the electrical supply to the burner acting on the main switch of the system.

THE BASIC CHECKS ARE:THE FUNDAMENTAL OPERATIONS TO CARRY OUT ARE AS FOLLOWS:

Fig. 15

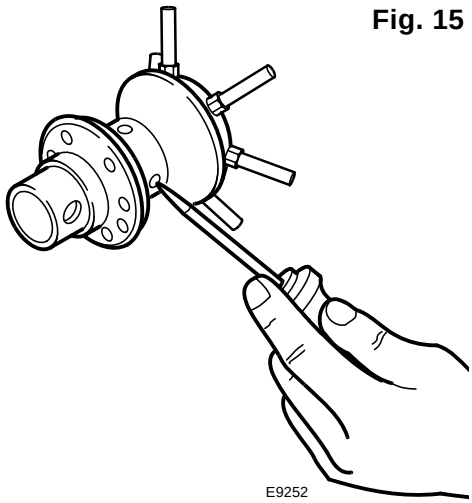

- ➤ Check at regular intervals that the holes of the gas head are not obstructed. If they are, clean them with a suitable tool as shown in the figure 15.
- ➤ Check there are no occlusions or obstructions in the inlet or return pipes, in the air suction areas and in the combustion product waste pipe.
- ➤ Check that the burner and gas train electrical connections are correct.
- ➤ Check that the gas train is suited to the burner capacity, the type of gas used and the network gas pressure.
- ➤ Check that the positioning of the combustion head is correct and that it is properly fixed to the boiler.
- ➤ Check that the air damper is positioned correctly.
- ➤ Check that the ionisation probe and the electrode are positioned correctly (see fig. 8, page 7).
- ➤ Check that the air pressure switch and the gas pressure switch are set correctly.

Leave the burner working without interruptions for 10 min. and checking the right 1st and 2nd stage settings of all the components stated in this manual.

Then carry out a combustion check verifying:

- CO_2 percentage (%);
- CO content (ppm);
- NOx content (ppm);
- Ionisation current (µA);
- Flue gases temperature at the stack.

6. FAULTS / SOLUTIONS

The control box has a self-diagnostic system, by which it is possible to easily check the faults and find the solutions.
To use this function, wait for a minimum of 10 sec after the lock out, then push the reset button for 3 sec. After releasing the button, the RED LED will begin to flash, as shown in the following schedule.

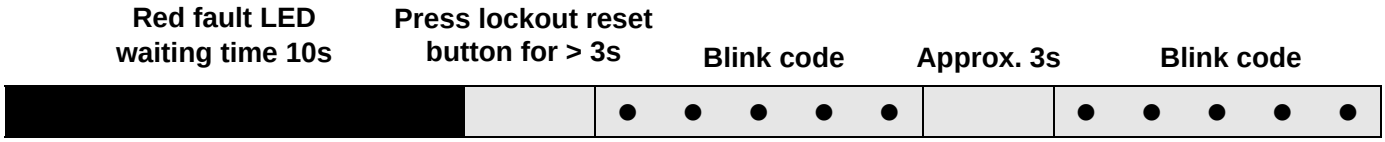

The LED provide a blink code each 3sec.
The blink codes give the information of the possible faults, as follows:

BLINK CODE	POSSIBLE CAUSE
2 ● ●	The flame does not stabilize at the end of the safety time: – faulty or soiled ionization probe; – faulty or soiled fuel valves; – neutral/phase exchange; – poor burner regulation.
3 ● ● ●	Minimum air pressure switch does not close: – make sure VPS trips to produce lockout; – air pressure switch faulty; – air pressure switch incorrectly regulated; – fan motor does not run; – maximum air pressure switch operating.
4 ● ● ● ●	Extraneous light during pre-purging, or control box faulty.
5 ● ● ● ● ●	Minimum air pressure switch does not open: – air pressure switch faulty; – air pressure switch incorrectly adjusted.
7 ● ● ● ● ● ● ●	Loss of flame during operation: – poor burner regulation; – faulty or soiled fuel valves; – short circuit between ionization probe and earth.
10 ● ● ● ● ● ● ● ● ● ●	Control box faulty.

7. GENERAL INFORMATION

IDENTIFICATION

The Identification Plate on the product gives the serial number, model and main technical and performance data. If the Identification Plate is tampered with, removed or missing, the product cannot be clearly identified thus making any installation or maintenance work potentially dangerous.

GENERAL WARNINGS

The dimension of the boiler's combustion chamber must respond to specific values, in order to guarantee a combustion with the lowest polluting emissions rate.
The Technical Service Personnel will be glad to give you all the imformation for a correct matching of this burner to the boiler.

This burner must only be used for the application it was designed for.

The manufacturer accepts no liability within or without the contract for any damage caused to people, animals and property due to installation, adjustment and maintenance errors or to improper use.

USER INFORMATION

If faults arise in ignition or operations, the burner performs a "safety stop", which is signalled by the red burner lock out Led. To rearm start up conditions, press the release button.
When the burner starts up again, the red Led goes out. This operation can be repeated for a maximum of 3 times.
If the "safety stop" recurs, then the Technical Assistance Centre must be called out.

BASIC SAFETY MEASURES

- ➤ Children or inexpert persons must not use the appliance.
- ➤ Under no circumstances must the intake grids, dissipation grids and ventilation vents in the installation room be covered up with cloths, paper or any other material.
- ➤ Unauthorised persons must not attempt to repair the appliance.
- ➤ It is dangerous to pull or twist the electric leads.
- ➤ Cleaning operations must not be performed if the appliance is not disconnected from the main power supply.
- ➤ Do not clean the burner or its parts with inflammable substances (e.g. petrol, alcohol, etc.). The cover must be cleaned with soapy water.
- ➤ Do not place anything on the burner.
- ➤ Do not block or reduce the size of the ventilation vents in the installation room.
- ➤ Do not leave containers and inflammable products in the installation room.

8. ACCESSORIES

PC INTERFACE KIT: code 3002719

MULTIBLOC ROTATION KIT
There is a special kit available that can be used to install the burner turned 180°, as illustrated on page 5 in position 5 in the section entitled "**3.1 WORKING POSITION**". This kit is designed to ensure the gas train valve works properly.
The kit must be installed in conformity with laws and local regulations.

KIT POTENTIOMETER FOR INDICATION OF LOAD POSITION: code 3010109

OUTPUT POWER REGULATOR KIT
Under modulating operation, the burner automatically adapts to one of an infinite number of firing rates between the low and high flame output position, thus ensuring stable operating conditions in terms of temperature or pressure. Two components should be ordered
– power regulator to install to the burner;
– probe to install to the boiler.

PARAMETER TO BE REGULATED	PROBE			REGULATOR	
	Range	Type	Code	Type	Code
Temperature	– 100...+ 500 °C	PT 100	3010110	RWF40	3001078
Pressure	0...2.5 bar	Output probe 4...20 mA	3010213		
	0...16 bar	Output probe 4...20 mA	3010214		

符合 ISO / IEC 17050-1 标准声明		
制造商 :	RIELLO S.p.A.	
地址 :	Via Pilade Riello, 7 37045 Legnago (VR)	
产品名称 :	燃气燃烧器	
型号 :	BS3/M TXL	
以上产品符合如下技术标准 :		
EN 676		
EN 12100		
且符合如下欧洲指令 :		
MD	2006/42/EC	机械指令
LVD	2006/95/EC	低电压指令
EMC	2004/108/EC	电磁兼容性
该系列产品标识如下 :		

产品质量符合 UNI EN ISO 9001 质量管理体系标准。

Legnago, 16.04.2012

Mr. G. Conticini
Burners Division Department
RIELLO S.p.A.

目录

1. 燃烧器描述

比例调节燃气燃烧器

➤ 本燃烧器电气保护等级为 IP X0D (IP 40), EN 60529。
➤ 燃气阀组符合 EN 676 标准。
➤ 本燃烧器符合 EN 676 所规定之间歇式运行标准。
➤ **瑞士用户须知：**必须遵守瑞士各地区、各州、 SVGW 及 VKF 等部门关于使用燃气的相关规定。

图 1

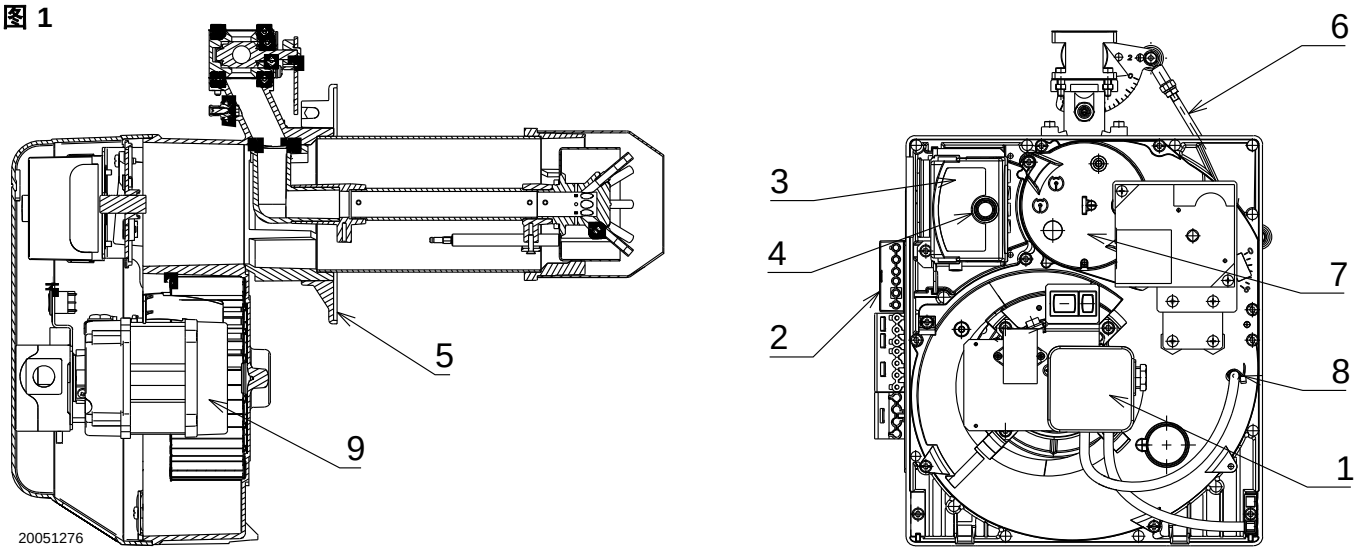

1 – 风压开关
2 – 燃气阀组用 6 孔插座
3 – 控制盒
4 – 带锁定指示灯的复位键
5 – 带隔热垫的法兰
6 – 风门挡板调节组件
7 – 燃烧头支架组件
8 – 压力测试点
9 – 马达

1.1 燃烧器配置

带隔热垫的法兰 . . . . . 1 件
法兰用螺丝及螺母 . . . . . 1 件
7 针插头 . . . . . 1 件
安装法兰到锅炉用螺丝及螺母 . . . . . 4 件
4 针插头 . . . . . 1 件

2. 技术数据

2.1 技术数据

类型		917T2
热出力 **(1)**	kW	25 – 200
	Mcal/h	21.5 – 172
天然气 **(2 类)**		净热值 : 8 – 12 kWh/m^3 = 7000 – 10,340 kcal/m^3
		压力 : 最小 20 mbar – 最大 360 mbar
电源		单相 , 230V ± 10% ~ 50Hz
马达		运行电流 1.8A 2800 rpm 294 rad/s
电容		6.3 μF
点火变压器		一段火 230V / 0.2A – 二段火 8 kV / 12 mA
吸收电功率		0.35 kW
(1) 参考条件 : 温度 20°C - 大气压力 1013 mbar – 海拔高度 0 m 。		

如果使用第 3 类燃气 (LPG) ，需另配其它组件。

适用国家			AT - IT - DK - CH	GB - IE	DE	FR	NL	LU - PL	BE
燃气类别			II2H3B/P	II2H3P	II2ELL3B/P	II2Er3P	II2L3B/P	II2E3B/P	I2E(R)B,I3P
燃气压力	G20	H	20	–	–	–	–	–	–
	G25	L	–	25	20	–	25	25	–
	G20	E	–	–	20	20/25	–	20	20/25

2.2 外观尺寸

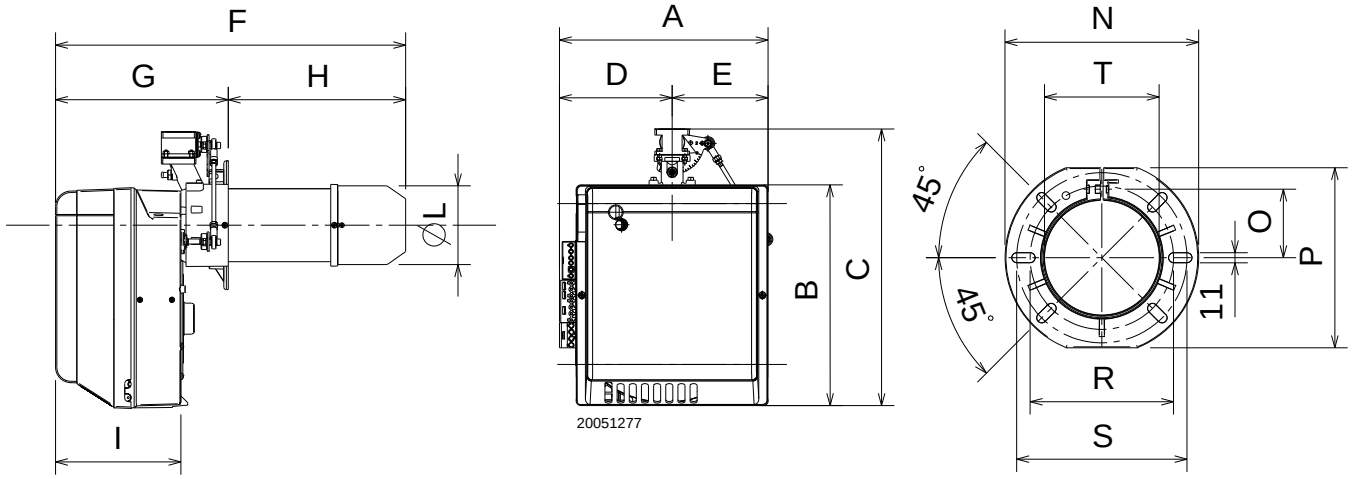

类型	A	B	C	D	E	F	G	H	I	L - T	M	N	O	P	R	S
917T2	330	345	391	150	150	550	322 – 337	282 – 267	196	129	285	216	76.5	201	160	190

2.3 出力范围

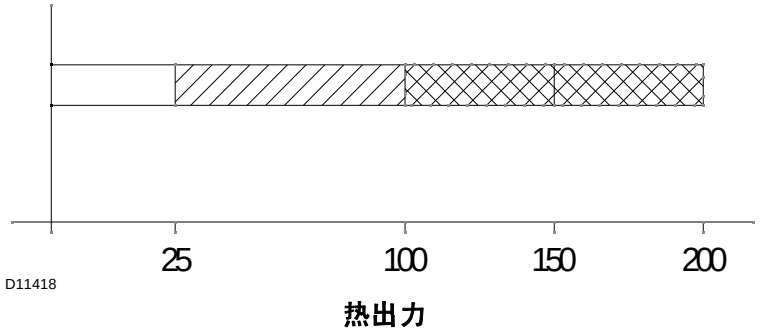

测试锅炉
根据 EN 676 标准测定燃烧器出力范围。

商用锅炉
如果锅炉符合 EN 303 标准，炉膛尺寸与 EN 676 图表所示相似，则燃烧器和锅炉相互匹配。
如果锅炉不符合 EN 303 标准，炉膛尺寸大大小于 EN 676 所列尺寸，请咨询制造商。

燃气压力与燃烧器出力的相关性
要获得最大出力，燃烧头处测得压力值为 10.5 mbar (**M2**，见章节 3.6, 第 7 页)，此时炉膛背压为 0 mbar，使用净热值为 10 kWh/m3 (8.570 kcal/m3) 燃气 G20。

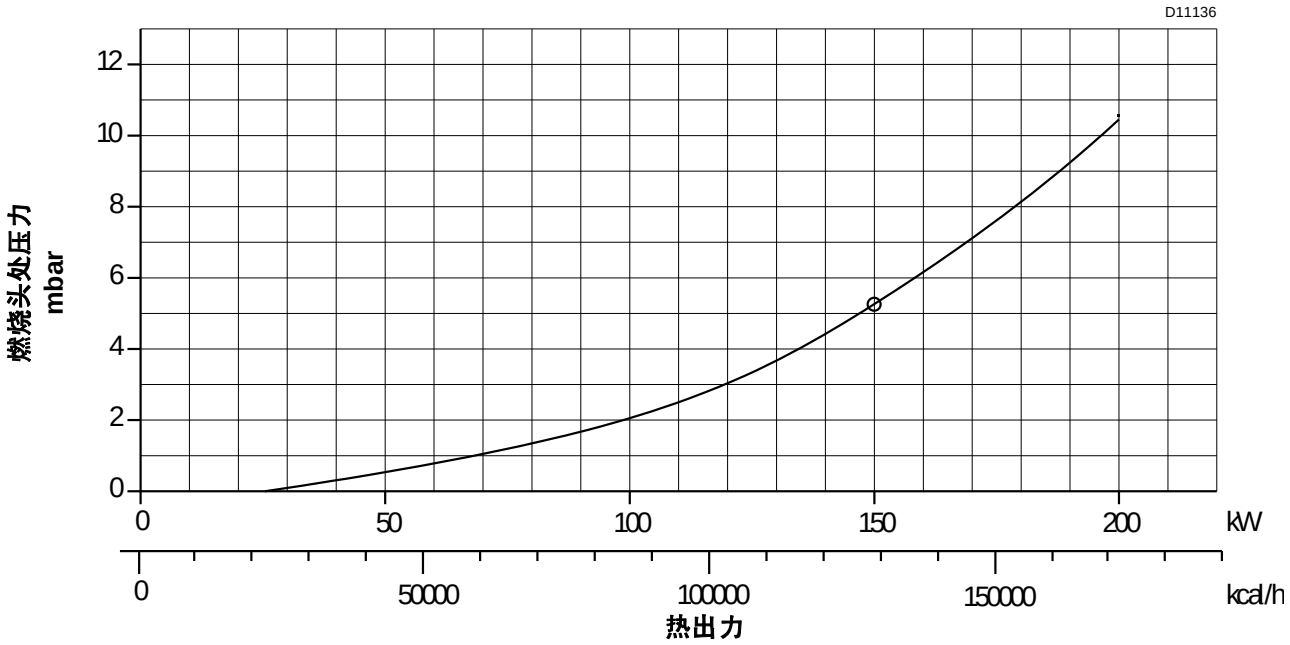

3. 安装

燃烧器的安装必须按照操作手册，由具有资质的专业人员操作，且符合安装地的强制标准。

3.1 安装位置

燃烧器只能安装在位置 **1**。
不建议将燃烧器安装在位置 **2, 3, 5, 6** 及 **7**。如将燃烧器安装在上述位置，可能会由于燃烧器待机时风门挡板不能完全关闭 而导致燃烧器无法正常运行。
如需将燃烧器安装在位置 **5**，需使用 “整机旋转组件”，此组件需单独订购。
为确保安全，禁止将燃烧器安装在位置 **4** 。

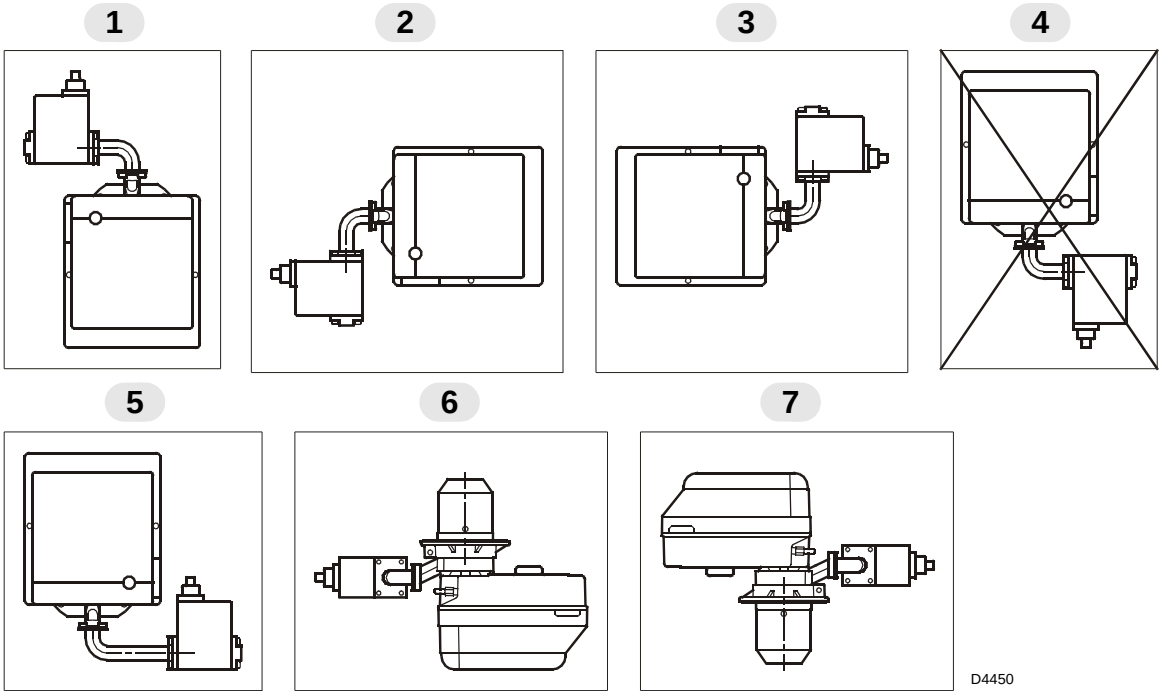

3.2 安装到锅炉上

将燃烧器安装到锅炉上，需按下述步骤操作：

➤ 如必要，可将隔热垫上的开孔 (3, 图 3) 适当扩大。

➤ **插入隔热垫 (3)**，用 4 个螺丝 (4) 以及螺母 (2)（如必要）将法兰 (5) 固定到锅炉炉门 (1) 上，但要拧松最上面两个螺丝 (4) 中的一个 (见图 2)。

➤ 将燃烧头穿过法兰 (5)，用螺丝 (6) 将法兰上紧，并将松动的螺丝 (4) 锁紧。

注意：燃烧器适合安装于不同尺寸的锅炉 **(A)** (见图 4)。但要确保燃烧头整个穿过锅炉炉门。

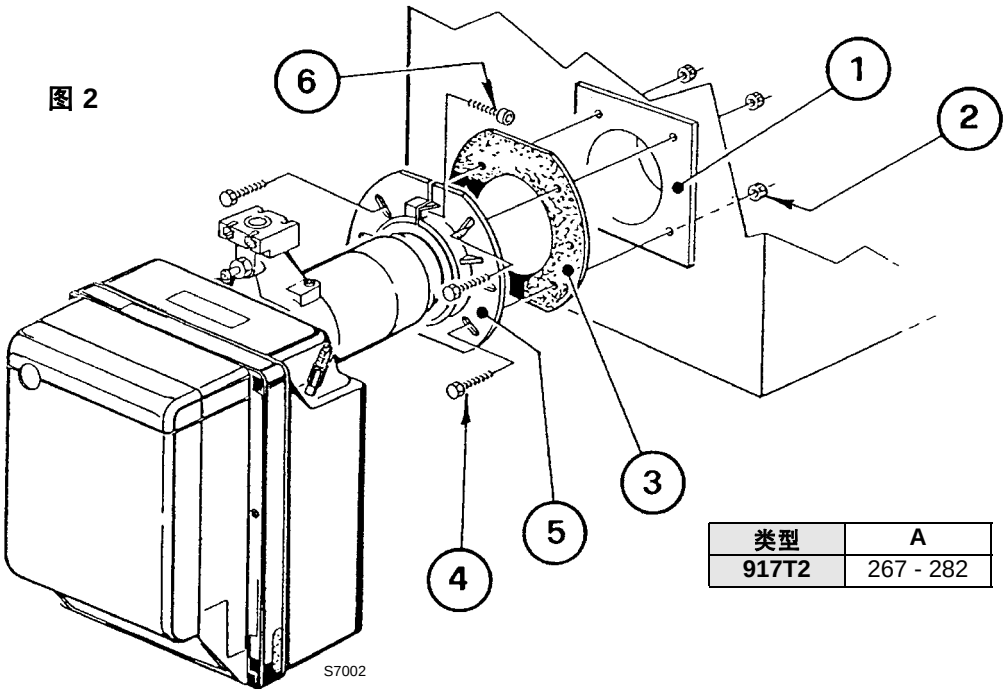

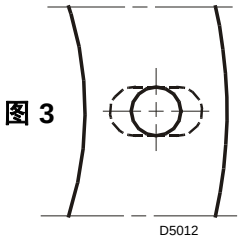

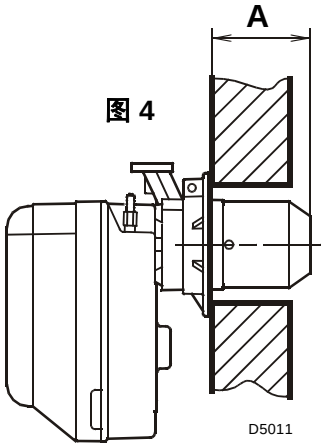

类型	A
917T2	267 - 282

3.3 探针电极位置

注意

➤ 确保固定板 (3，图 5) 总是固定住电极 (1)。

➤ 将探针绝缘体 (4) 靠在罩杯 (2) 上。

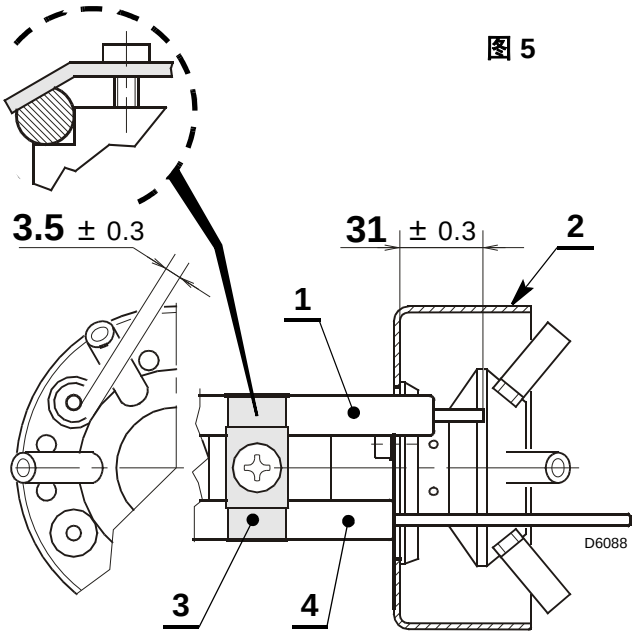

3.4 燃气阀组 , (符合 EN 676 标准)

燃气阀组单独提供，其调试参见随附手册。

燃气阀组		匹配燃烧器	连接		USE
类型	代码		入口	出口	
MBDLE 407 B01	3970548	BS3 - BS4	Rp 3/4	法兰 3	天然气 ≤ 150kW 及 LPG
MBDLE 410 B01	3970549	BS3/M	Rp 1 1/4	法兰 3	天然气和 LPG
MBDLE 412 B01	3970550	BS3/M	Rp 1 1/4	法兰 3	天然气

3.5 燃气阀组电源

燃气阀组电源线可连接在燃烧器右侧或左侧，如图6所示。根据电缆接入位置，带测试点的电缆夹 (1) 和简单的电缆夹 (2) 可以互换位置。

因此，必须确保：

➤ 电缆夹 (1) 的位置正确；

➤ 套管需正确定位，以防阻碍风压开关处的空气流动。

警告

如需要，可将套管截成合适的尺寸。

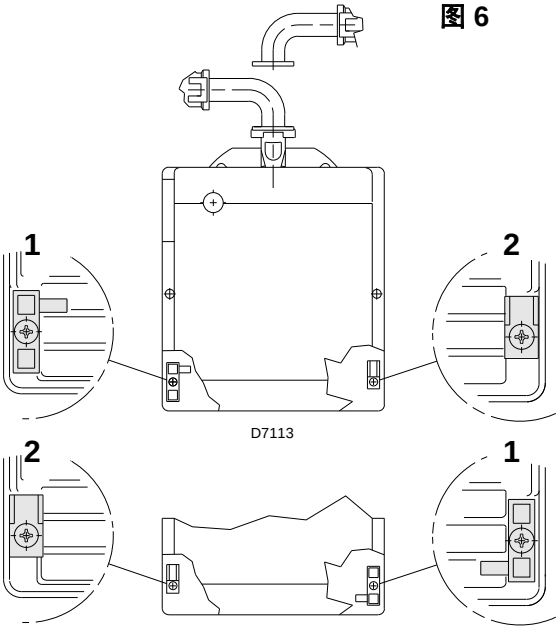

图 6

3.6 燃气管路

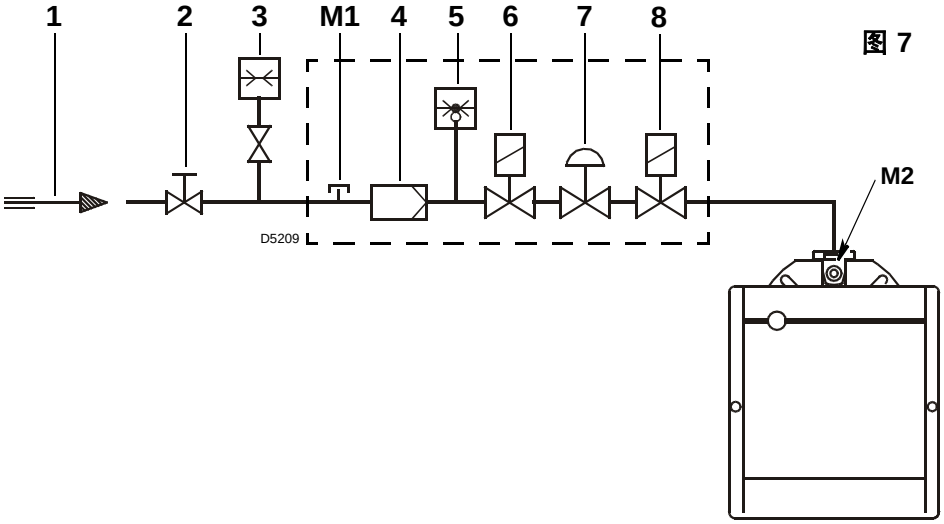

图 7

1 – 燃气管路
2 – 手动阀（安装方负责）
3 – 燃气压力表（安装方负责）
4 – 过滤器
5 – 燃气压力开关
6 – 安全阀
7 – 调压器
8 – 调节阀
M1 – 测试点处燃气压力
M2 – 燃烧头处压力测试点

3.7 标准电气连接 (由制造商负责)

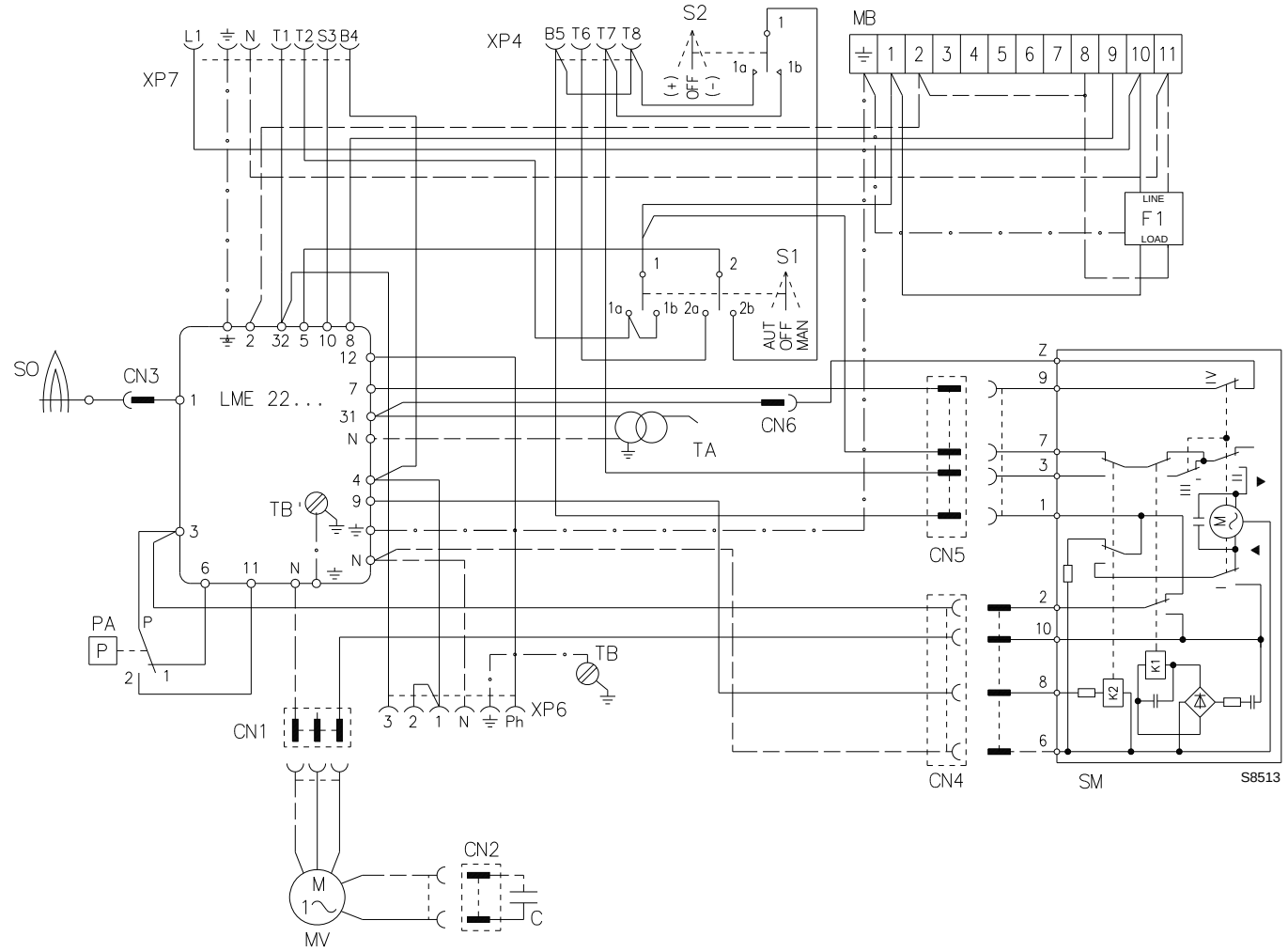

注意 :

➤ **中线和相线不要接反 , 按图仔细做好接地连接。**

➤ 连接导线的截面积不得小于 1mm²。*(除非当地标准或规定有其它要求)。*

➤ 电气接线必须由具有相关资质的人员来完成。

测试

断开极限温度控制器检查燃烧器是否停机 , 断开插在控制盒外面的探针的红色电缆的接头 (**CN3**) 检查燃烧器是否锁定报警。

注意

燃烧器设计为间歇式运行。因此必须每隔 24 小时停机一次以便控制盒自检启动过程中的有效性。锅炉温度限制控制器 (**TL**) 通常可以完成此任务。如果不能就需要在锅炉温度限制控制器 (**TL**) 串接一个时间继电器保证每 24 小时停机一次。

图例说明

C – 电机电容
CN... – 连接接头
F1 – 滤波器
MB – 辅助接线端子
MV – 电机
PA – 最小风压开关
SM – 伺服电机
SO – 离子探针
S1 – 开关 :
MAN = 手动运行
AUT = 自动运行
OFF = 备用
S2 – 按钮 :
– = 减负荷
+ = 加负荷
TA – 点火变压器
TB – 燃烧器接地
XP4 – 4 孔插座
XP6 – 6 孔插座
XP7 – 7 孔插座

3.8 电气连接 (由安装方负责)

警告

如果锅炉带有 7 针插头，请用随燃烧器附带的插头替换。

不带比调仪 (平滑两段火运行模式)

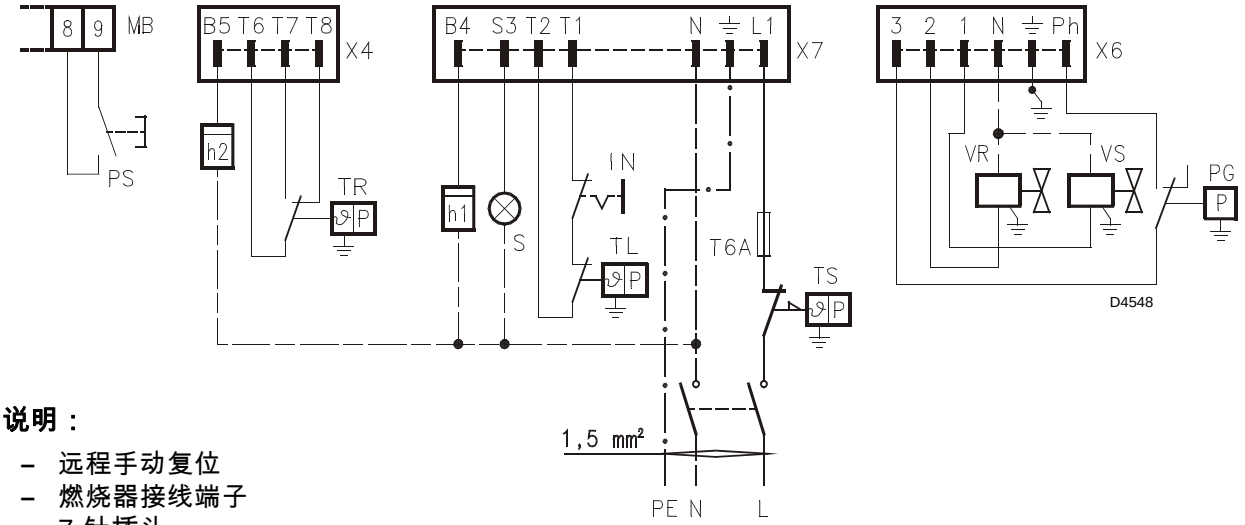

图例说明：

PS – 远程手动复位
MB – 燃烧器接线端子
X7 – 7 针插头
X4 – 4 针插头
X6 – 6 针插头
h2 – 2 段火计时器
TR – 两段火运行控制装置
h1 – 1 段火计时器
S – 远程锁定信号
IN – 手动停机按钮

TL – 极限温控装置
T6A – 保险丝
TS – 安全控制装置
PG – 最低燃气压力开关
VR – 调节阀
VS – 安全阀

带比调仪 (比例调节运行)

注意

不要在4针插头的 T6和 T8，7 针插头的 T1 和 T2 端子上接任何装置，避免干扰比调仪的工作。

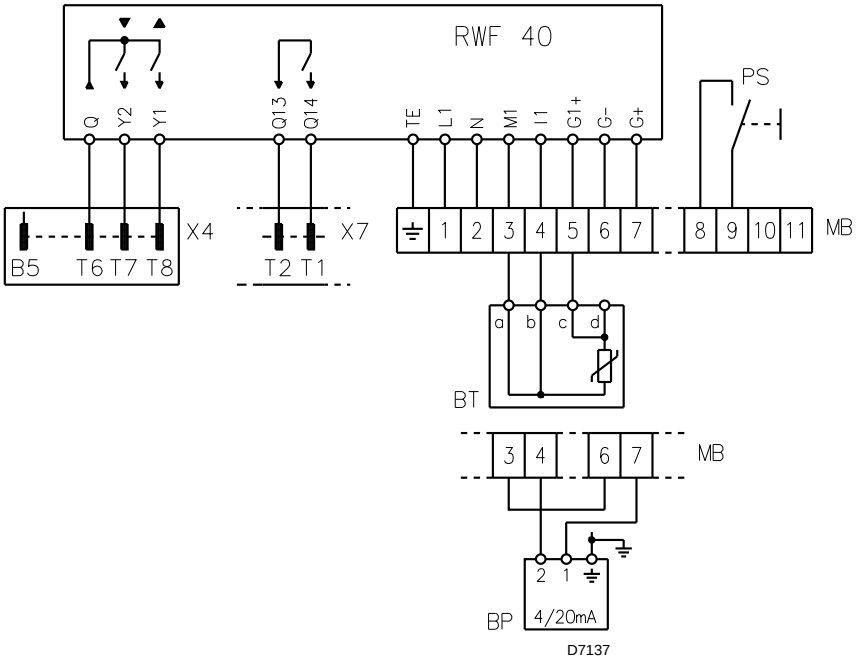

图例说明：

PS – 远程手动复位开关
MB – 燃烧器接线端子
X4 – 4 针插头
X7 – 7 针插头
BT – 温度探针
BP – 压力探针

4. 运行

4.1 燃烧调节

应用在锅炉上的燃烧器必须符合效率指令 92/42/EEC，其调试和测试必须按照锅炉操作手册进行，包括烟气中 CO 及 CO_2 的排放浓度、温度以及锅炉内的平均水温。

要根据所需出力要求，请选择适合的燃烧头及风门挡板开度设定。

4.2 燃烧头设定 (见图 9)

工厂预设燃烧头为最大出力状态 (设定点 8)。

根据燃烧器出力来调节燃烧头。
顺时针或逆时针旋转调节螺丝(6)直至调节杆(2)上所标示的定位点与燃烧头组件 (1) 外部的平齐。
图 9 所示为燃烧头调节杆设定在点 **3**。

取下燃烧头组件

按下列步骤取下燃烧头组件：

➤ 确定伺服马达 (7) 在关闭位置 (**凸轮 II = 0**)。
➤ 断开连接 (3 和 5)。
➤ 拧松螺丝 (4)，移开伺服马达 (7)。

注意事项

由伺服马达 (7) 控制的旋转轴 (10) 带有一个安全装置 (11)，以防止其在维修过程中突然转动。

➤ 拧松螺丝 (9), 拧松螺丝 (8)，向右轻轻转动燃烧头支架 (1) 并将其取下。

注意在拆卸过程中不要改变调节杆 (2) 的位置。

重新安装燃烧头组件

将上述操作按相反的顺序进行，将燃烧头组件 (1) 重新安装于原来的位置。

注意

➤ 上紧螺丝 (9)(不要锁紧)；然后将力矩扳手的力矩调整为 3 - 4 Nm，将螺丝锁紧。
➤ 检查在运行过程中，螺丝处是否有燃气泄漏。

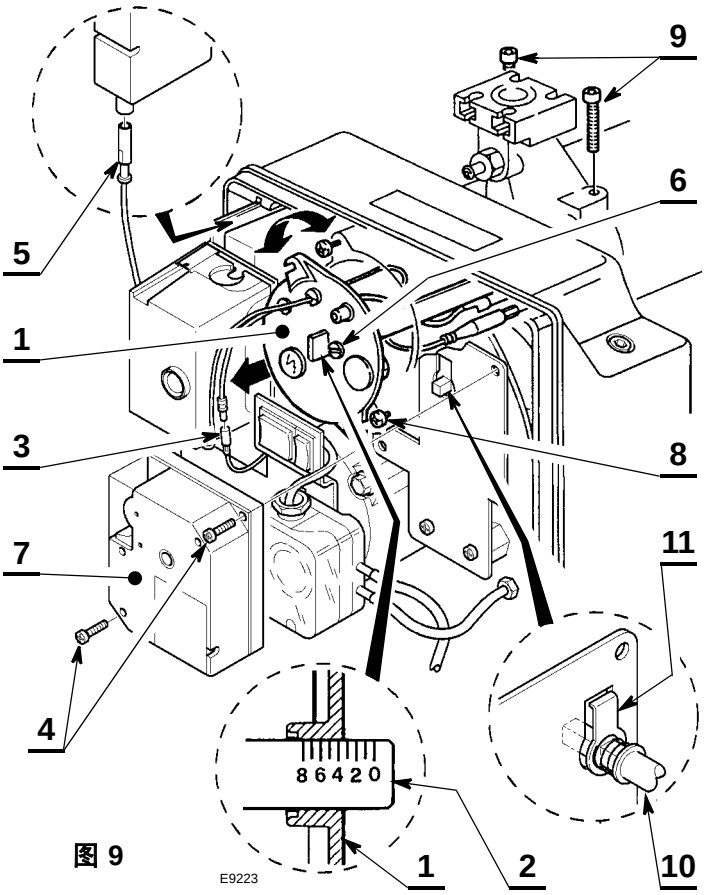

图 9

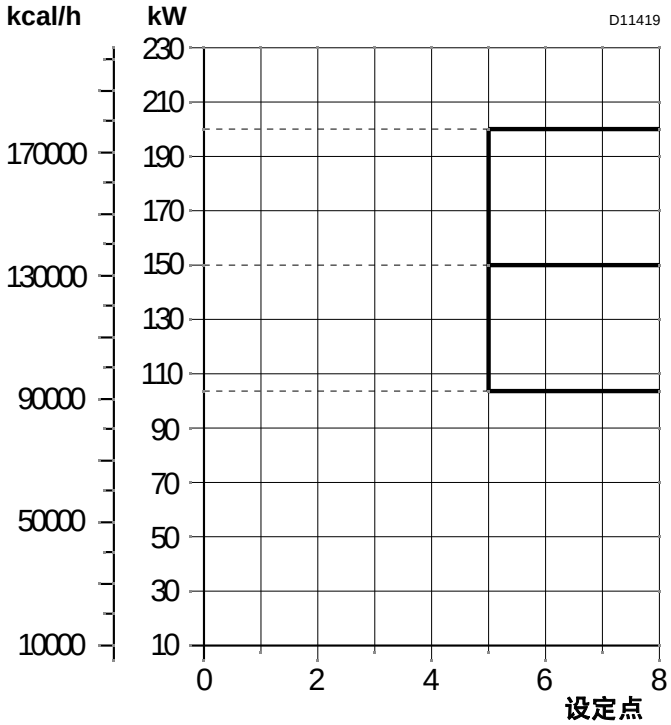

A 如果燃烧器运行时出力大于140 kW，则需将隔音罩取消，露出机器外盖上的排气口，如图 10 所示。

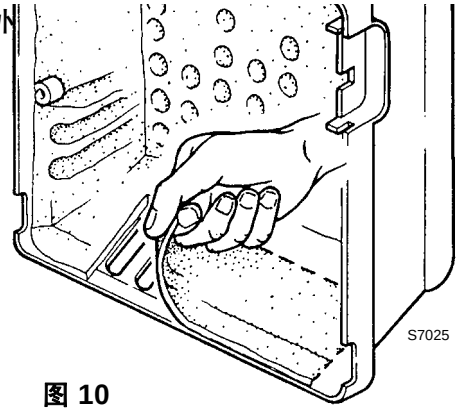

图 10

4.3 马达风门挡板设定，(见图 11)

待机 — **凸轮 II**

凸轮 II 可保证燃烧器停机（ 待机 ）时，风门挡板完全关闭。 出厂时，凸轮位置设定为 0°。**请勿更改。**

小火 — **凸轮 III**

凸轮 III 可调节点火和最小出力时风门挡板的位置。此凸轮可在使用中进行调节。

大火 — **凸轮 I**

凸轮 I 可调节最大出力时调节风门挡板位置，限定燃烧器的出力（ 以适应锅炉出力 ）。工厂预设角度为 90°。

图 11

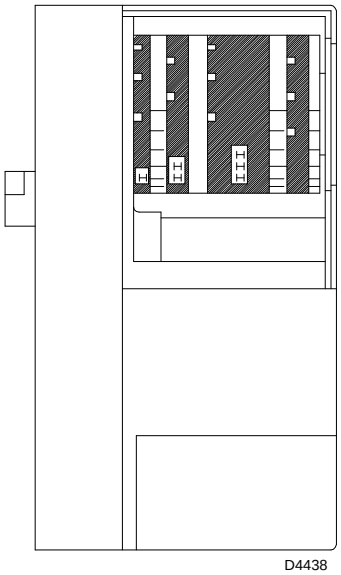

当**凸轮 III** 角度变小时，伺服马达随之调整。

如需增大该凸轮角度，则需先通过“增加出力 **(+)**”键增大伺服马达角度，然后再增大**凸轮 III** 角度，最后，通过“减小出力 **(-)**”键，将伺服马达调整至最小出力位置。

如需要，调整**凸轮 III** 时，可先将扣在其上的外盖 (1) 取下，如图 12，取下内部的专用工具 (2) 插入**凸轮 III** 的插槽内来调整。

图 12

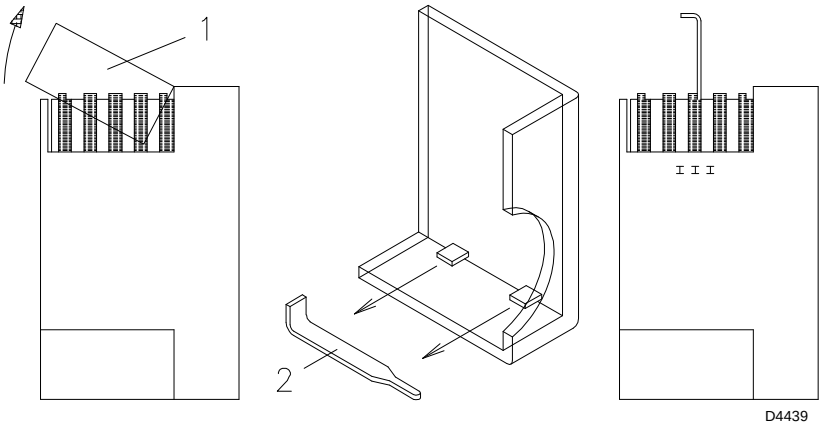

4.4 燃烧器调节

根据比例调节需要，连接空气－燃气杠杆的拉杆可固定在 3 个位置上。工厂将拉杆预设为位置 1。

图 13

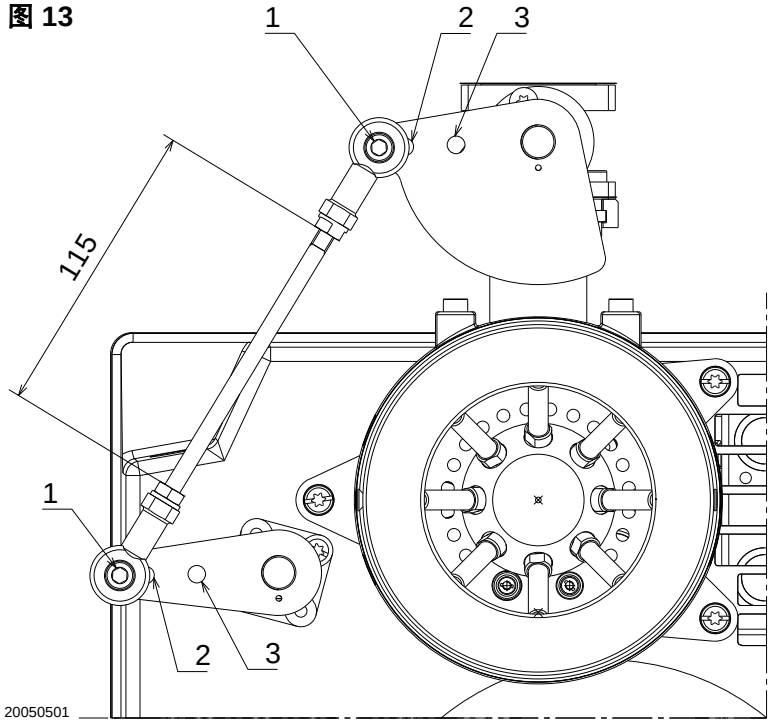

出力 (kW)	燃气压力 - M2 (mbar)	燃烧头设定	伺服马达设定	
			最小	最大
100	2,2	5	20%	55%
150	5,5	5	20%	75%
200	10,5	5	20%	100%

以上为炉膛背压为 0 mbar 时的数值。如背压低于或高于 0 mbar，需对燃烧头进行调节。

工厂设定			伺服马达设定	
出力 (kW)	燃气压力 - M2 (mbar)	燃烧头设定	最小	最大
100	2,3	8	20%	55%
150	6	8	20%	75%
200	11	8	20%	100%

以上为炉膛背压为 1 mbar 时的数值。如背压低于或高于 1 mbar，需对燃烧头进行调节。

通过调节凸轮 I，限制伺服马达开启角度，可以将燃烧器最大出力从 200kw 调节至最大出力 (100 and 150 kW)。
如此调节后，伺服马达位置的指示将只能显示部分负荷。因此，PLC 软件将有可能根据需要预知“降低”这一指标。

在实验室进行的燃烧性能检测

A	B	C												D
		200	170	150	140	120	110	90	80	60	40	30	25	
0 mbar	CO_2	9,7	9,7		10,1		10,1		9,8		7,1		8,8	5
	CO	1	1		1		1		1		24		23	
0 mbar	CO_2			9,9			10,1			8,8			8,8	5
	CO			1			1			1			23	
1 mbar	CO_2	9,9	10,1		10,4		10,5		10		7,1		8,5	8
	CO	3	3		4		6		4		34		11	
1 mbar	CO_2			10,3		10,5		10,2		9,1			8,5	8
	CO			3		4		4		3			11	

A 炉膛背压
B CO_2 = % - CO = ppm
C 出力 kW
D 燃烧头设定点
***** 取下机器外壳后的燃烧器

4. 5 燃烧状态检测

应用于锅炉上的燃烧器必须符合效率指令 92/42/EEC，燃烧器的调整和测试都必须遵照锅炉操作手册进行，包括烟气排放中的 CO 及 CO_2 的浓度、温度以及锅炉中水的平均温度。
建议根据所使用的燃气类型及下表所列参数设定燃烧器：

EN 676		过量空气 最大输出 λ ≤ 1.2 – 最小输出 λ ≤ 1.3			
燃气	理论最大值 CO_2 0 % O_2	设定 CO_2 % λ = 1.2	λ = 1.3	CO mg/kWh	NO_x mg/kWh
G 20	11.7	9.7	9.0	≤ 100	≤ 170
G 30	14.0	11.6	10.7	≤ 100	≤ 230
G 31	13.7	11.4	10.5	≤ 100	≤ 230

离子电流
控制盒运行所需的最小电流为 2 µA。
通常情况下，燃烧器提供的电流更大，所以一般不需检查此项。但如果想测量离子电流，必须断开电缆上的连接器 **(CN3)**(见电气连接图第 8 页)，在其中接入一个微安计。

图 14

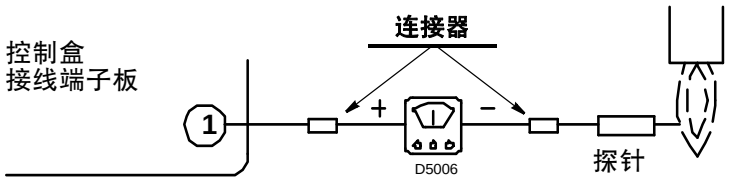

4.6 风压开关

风压开关置于起始位置状况下完成上述所有调试后，方可调整空气压力开关。当燃烧器以最小出力运行时，以顺时针方向缓慢转动旋钮直至燃烧器锁定。然后，将旋钮以逆时针方向旋转增加大约设定值的 20%，查看燃烧器启动是否正常。如果燃烧器再次锁定，则将旋钮继续沿逆时针方向小幅转动。

注意：
按照标准，风压开关必须保证空气压力不得低于调整值的 80%，以确保烟气中的 CO 排放量不超过 1% (10,000 ppm)。
要检测此项，需将烟气分析仪插入烟囱处，缓慢关小风机进风口 *(* 如使用纸板遮挡 *)*，检查确认烟气中 CO 排放量超过 1% 时燃烧器锁定。

4.7 燃气压力开关

燃气压力开关设定见燃气阀组操作手册。

4.8 燃烧器启动周期

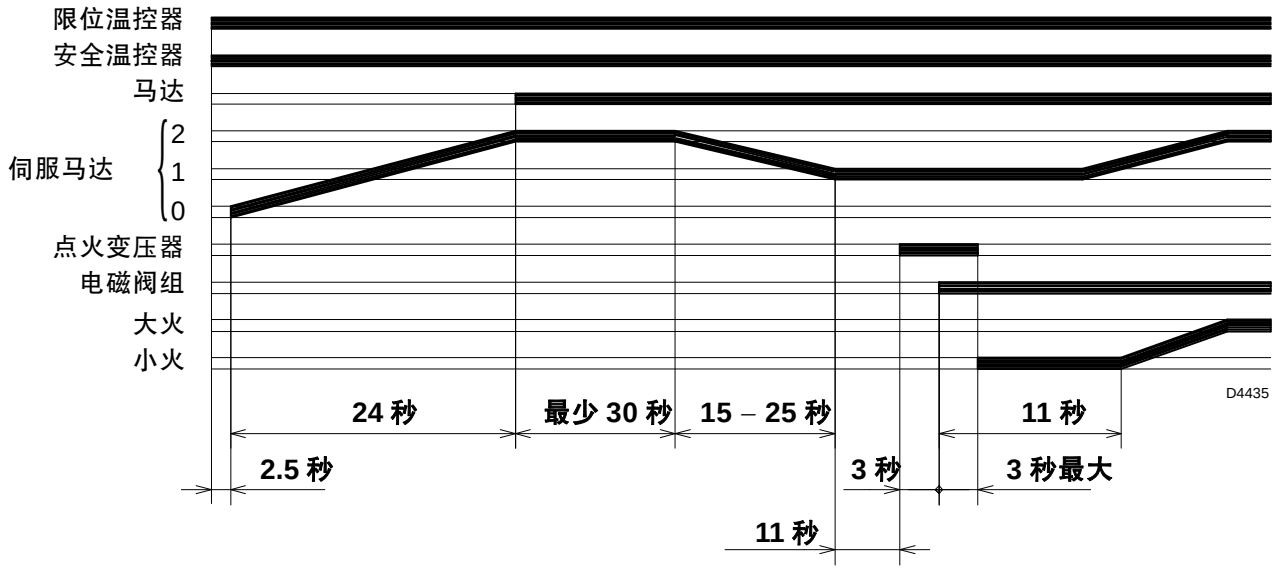

5. 维护

燃烧器需定期由具有资质的技术人员进行检修，**并符合当地的强制性规范**。

定期检修可保证燃烧器的良好性能，避免燃料的过度消耗以及污染物的排放增加。

在进行任何清洗或操作之前，请务必先切断燃烧器系统主电源开关。

基本维护要求：执行如下基本操作：

➤ 检查确认燃烧头的燃气孔没有任何堵塞。如有堵塞，请如图 15 所示，用适当工具将堵塞物清除。

➤ 检查确认空气吸入区域及烟气排放管路没有任何堵塞。

➤ 检查确认燃烧器及燃气阀组的电气连接正确。

➤ 检查确认所选燃气阀组与燃烧器型号、燃气类型以及管路燃气压力相匹配。

➤ 检查确认燃烧头位置正确，且正确安装于锅炉上。

➤ 检查确认风门挡板位置正确。

➤ 检查确认离子探针及电极位置正确 (见图 8，页 7)。

➤ 检查确认风压开关以及燃气压力开关设置正确。

使燃烧器连续运行 10 分钟以便检查 1 段火及 2 段火运行时操作手册中所列所有部件的设置是否正确。

图 15

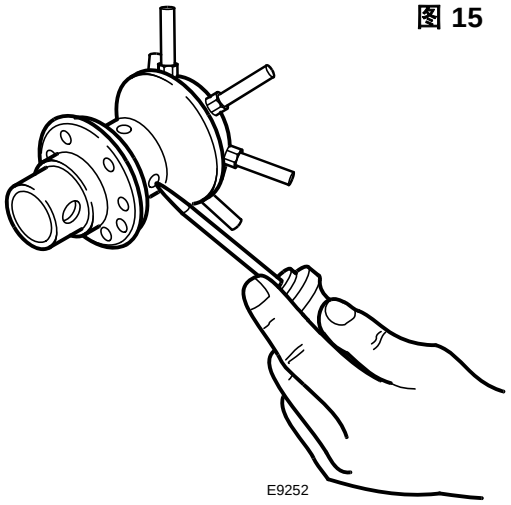

随后执行下列燃烧状态检查，以了解：

- CO_2 比例 (%);
- CO 排放量 (ppm);
- NOx 排放量 (ppm);
- 离子电流 (µA);
- 烟囱处的烟气温度。

6. 故障 / 解决方案

控制盒具有自我诊断故障功能，因此很容易确定故障原因并实施解决方案。
要使用这一功能，须等进入锁定状态至少 10 秒之后再按下复位按钮 3 秒。松开按钮后，**红色** LED 灯会依下表所述闪烁。

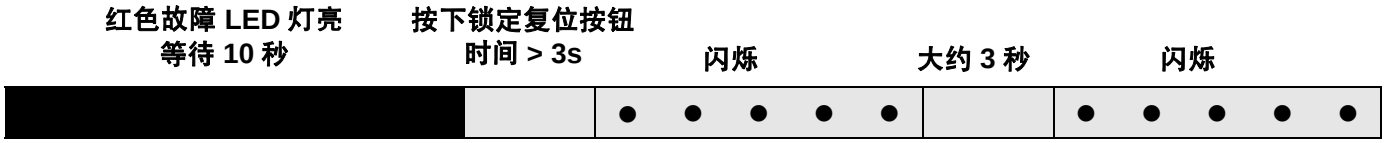

每隔 3 秒， LED 灯会闪烁。
闪烁次数可以提示可能的故障原因，如下表：

闪烁次数	可能的故障原因
闪烁 2 次 ● ●	安全时间结束后火焰状态不稳定： – 电离探针故障或脏； – 电磁阀组故障或脏； – 零线 / 相线接反； – 燃烧器调整不当。
闪烁 3 次 ● ● ●	最小空气压力开关未闭合； – 风压开关故障； – 风压开关调节不当； – 风机马达未运转； – 风压开关处于运行位置。
闪烁 4 次 ● ● ● ●	预吹扫时外部光线过亮，或控制盒故障。
闪烁 5 次 ● ● ● ● ●	风压开关没有断开： – 风压开关故障； – 风压开关调整不当。
闪烁 7 次 ● ● ● ● ● ● ●	运行中熄火： – 燃烧器调整不当； – 电磁阀组故障或脏； – 电离探针接地造成短路。
闪烁 10 次 ● ● ● ● ● ● ● ● ● ●	控制盒故障。

7. 一般信息

铭牌
产品上的铭牌标识出了其序列号、机型以及主要的技术及性能参数。产品因铭牌被涂改、移除或是丢失而无法识别的，会对其安装及维护造成潜在危险。

一般警告
为保证燃烧的污染排放最低，锅炉燃烧室的尺寸必须达到一个特定值。
因此建议用户在为锅炉选配此型号燃烧器之前咨询技术支持部。
此燃烧器必须且只能用于专为其设计的用途。
基于燃烧器的错误安装及调试、非正常使用、未按产品所附技术手册操作以及无操作资质人员操作产品所造成的任何人、畜及财产损失，本产品制造商不承担任何责任。

用户须知
若在点火及运行过程中发生故障，燃烧器会启动“安全停机”模式，此时燃烧器红色 Led 锁定指示灯亮。要重新启动燃烧器，需按下复位按钮。
燃烧器重新启动后，红色 Led 指示灯熄灭。此操作最多可重复 3 次。
如“安全停机”模式再次发生，需联系我们的技术支持中心。

基本安全规程
- 儿童及非专业人士禁止使用该设备。
- 在任何情况下，禁止使用布、纸及其它任何材料堵塞设备安装室的进气格栅、排气格栅及通风孔。
- 非认证人员不得对设备进行维护维修。
- 不得抽拉及缠绕电线。
- 清洁设备前必须断开主电源。
- 不得用易燃物（ 如汽油、酒精等 ）清洁燃烧器及其部件。设备外盖只能用肥皂水清洗。
- 不得在燃烧器上放置物品。
- 不得堵塞设备安装室内通风孔或缩小其尺寸。
- 不得将各类容器及易燃物遗留于设备安装室内。

8. 配件

PC 界面组件 : code:3002719

整机旋转组件
此组件用于将燃烧器旋转 180 度安装，如第 5 页 "**3.1 工作位置** " 章节位置 5 所示。此装置设计用于确保燃气阀组能正常工作。
此组件的安装须符合当地法律法规。

指示位置的电位计组件：code：3010109

出力比调仪组件
比例调节运行时，燃烧器在最小火和最大火中间自动调节出力大小，确保温度或压力保持稳定。必须订购如下两个部件：
– 安装于燃烧器上的出力比调仪；
– 安装于锅炉上的探针。

调节参数	探针			比调仪	
	范围	型号	代码	型号	代码
温度	– 100...+ 500 °C	PT 100	3010110	RWF40	3001078
压力	0...2.5 bar	探针，输出 4...20 mA	3010213		
	0...16 bar	探针，输出 4...20 mA	3010214		

Registered Office - 公司注册所在地 :
RIELLO S.p.A.
I-37045 Legnago (VR)
Tel.: +39.0442.630111
http:// www.riello.it
http:// www.rielloburners.com

Manufacturing site:
Riello Heating Equipment (Shanghai) CO., LTD
No. 388, Jinbai Road - Jinshan Industrial Zone
201506 - Shanghai
CHINA

生产场所 :
Riello Heating Equipment (Shanghai) CO., LTD
利雅路热能设备 (上海) 有限公司
上海市金山工业区金百路 388 号