Installation, use and maintenance instructions
安装，使用以及维护说明书

RIELLO

GB **Forced draught gas burner**

CN **强制通风燃气燃烧器**

One stage operation
一段火运行

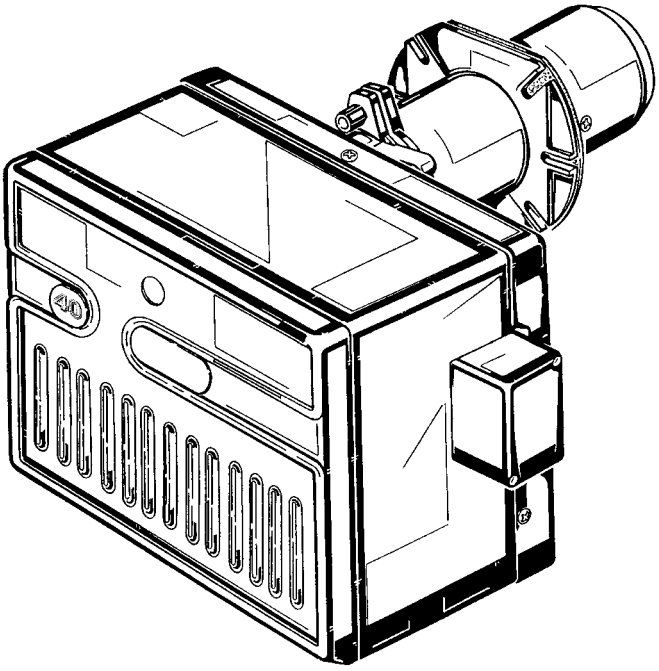

RIELLO 40

CODE - 编码	MODEL - 型号	TYPE - 类型
20013643	**GS5**	**552T1**

20013757 (2) - 06/2009

INFORMATION ABOUT THE INSTRUCTION MANUAL

INTRODUCTION

The instruction manual supplied with the burner:

- is an integral and essential part of the product and must not be separated from it; it must therefore be kept carefully for any necessary consultation and must accompany the burner even if it is transferred to another owner or user, or to another system. If the manual is lost or damaged, another copy must be requested from the Technical Assistance Service RIELLO of the area;
- is designed for use by qualified personnel;
- offers important indications and instructions relating to the installation safety, start-up, use and maintenance of the burner.

DELIVERY OF THE SYSTEM AND THE INSTRUCTION MANUAL

When the system is delivered, it is important that:

- The instruction manual is supplied to the user by the system manufacturer, with the recommendation to keep it in the room where the heat generator is to be installed.
- The instruction manual shows:
  - the serial number of the burner;

    .....

  - the address and telephone number of the nearest Assistance Centre;

    .....
    .....
    .....

- The system supplier carefully informs the user about:
  - the use of the system,
  - any further tests that may be necessary before the system is started up,
  - maintenance and the need to have the system checked at least once a year by the manufacturer or another specialised technician.

    To ensure a periodic check, RIELLO recommends the drawing up of a Maintenance Contract.

TECHNICAL DATA

Thermal output		18 – 58 kW – 15,500 – 50,000 kcal/h
Gas (Family 2)	Net heat value	8 – 12 kWh/m^3 – 7,000 – 10,340 kcal/m^3
	Pressure	min. 20 mbar – max. 35 mbar
Electrical supply		single phase, 230 V ± 10% ~ 50Hz
Motor		230 V / 0.65 A
Capacitor		2 µF
Ignition transformer		primary 230 V / 0.2 A – secondary 8 kV
Absorbed electrical power		0.11 kW

For gas family 3 (LPG) ask for separate kit.

COUNTRY	DE	DK - AT - GR - SE	GB - IE	LU	NL
GAS CATEGORY	II2ELL3B/P	II2H3B/P	II2H3P	II2E3B/P	II2L3B/P

- The burner meets protection level of IP X0D (IP 40), EN 60529.
- According to Directives: EMC 89/336/EEC - 2004/108/EC, Low Voltage 73/23/EEC - 2006/95/EC, Machines 98/37/EEC and Efficiency 92/42/EEC.
- Gas train according to EN 676.

Fig. 1

1 – Air-dampers

2 – Screws for fixing the air-damper

3 – 6 pole gas-train plug

4 – 7 pole electrical controls plug and socket

5 – Grommet

6 – Screw for fixing the cover

7 – Lock-out lamp and reset button

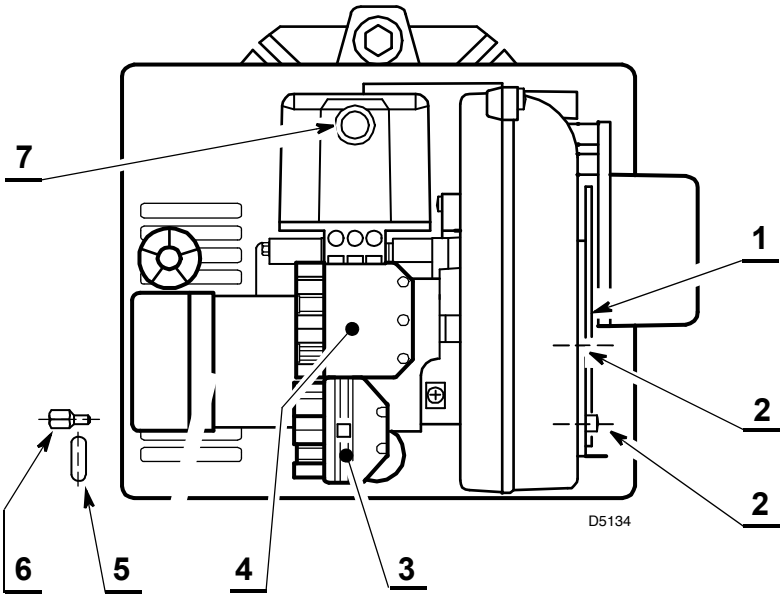

NOTE

The grommet (5) and the screw for fixing the cover (6) supplied with the burner, must be fitted to the same side of the gas train.

DIMENSIONS

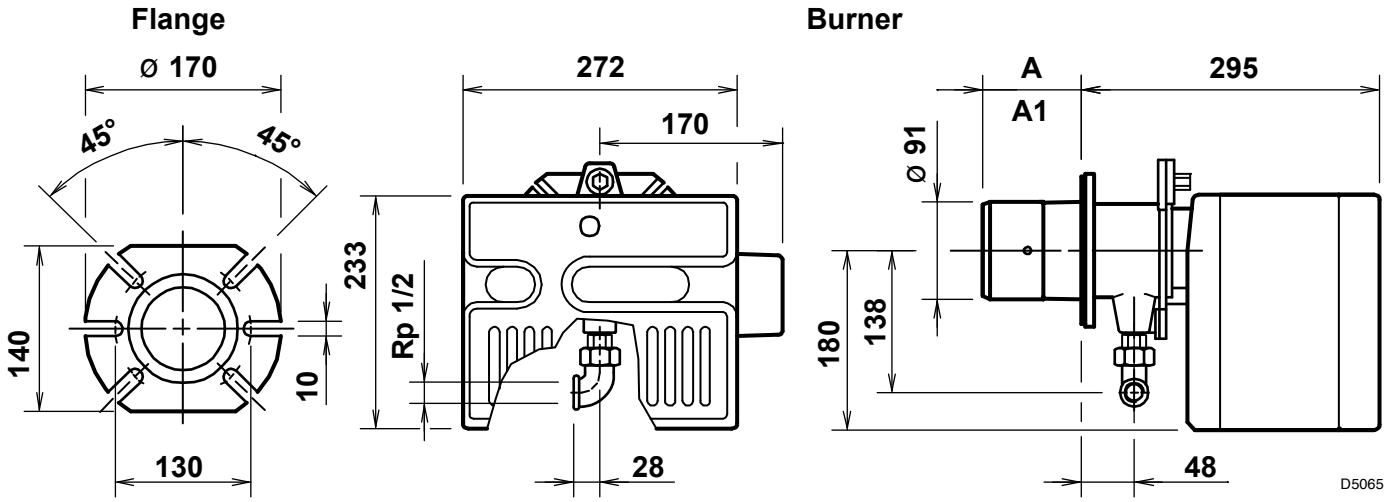

A	A1 – Lenght available using an extended head kit
100	125

BURNER EQUIPMENT

Quantity	Description
1	7 pin plug
4	Screws with nuts
1	Insulating gasket
1	Screw for fixing the cover
1	Grommet
1	Hinge

FIXING TO THE BOILER

Separate the combustion-head assembly from the burner body by removing nut (1) and removing group **(A)**.

Fix the head assembly group **(B)** to the boiler (2) insert the equipped insulating gasket (3).

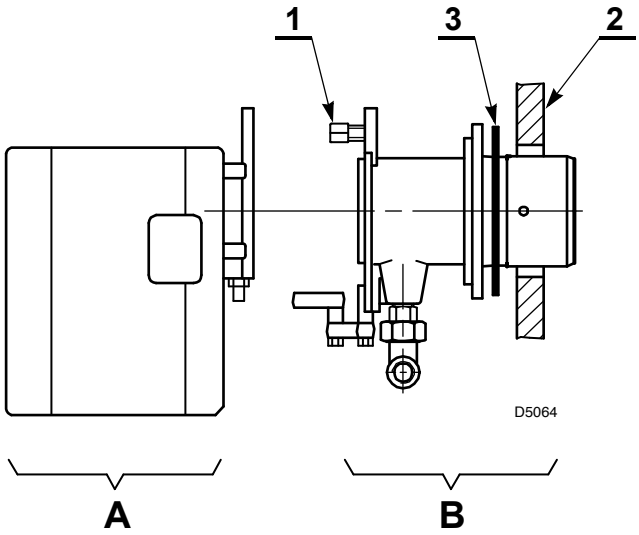

HINGE ASSEMBLY

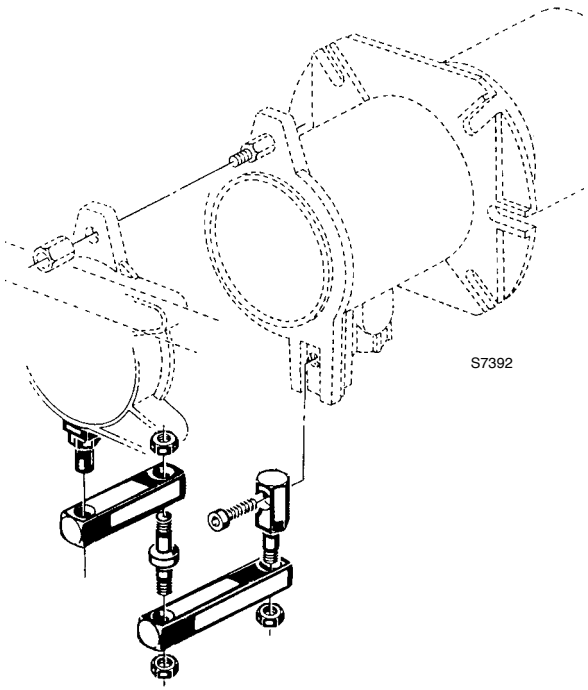

WORKING RANGE

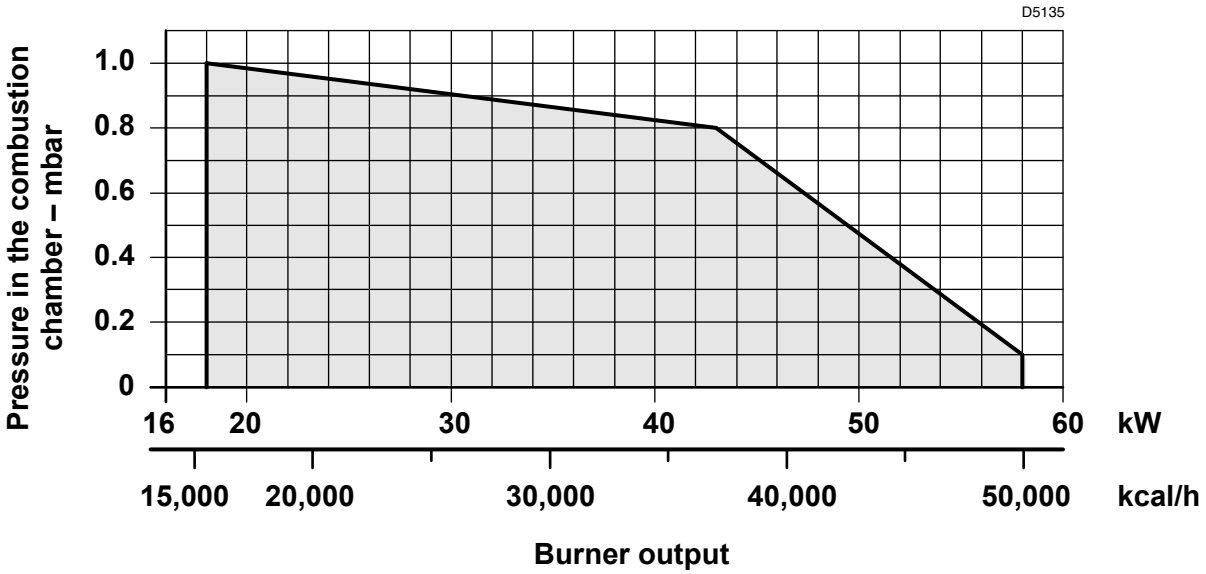

TEST BOILER

The working field has been defined according to DIN 4788 and EN 676 standards.

COMMERCIAL BOILERS

The burner-boiler matching is assured if the boiler is according to EN 303 and the combustion chamber dimensions are similar to those shown in the diagram EN 676.
For applications where the boiler is not according to EN 303, or where the combustion chamber dimensions differ from those shown in EN 676, please consult the manufacturers.

CORRELATION BETWEEN GAS PRESSURE AND BURNER OUTPUT

To obtain the maximum output, a gas head pressure of 4.6 mbar is measured with the combustion chamber at 0 mbar using gas G20 with a net heat value of 10 kWh/m^3 (8,570 kcal/m^3).

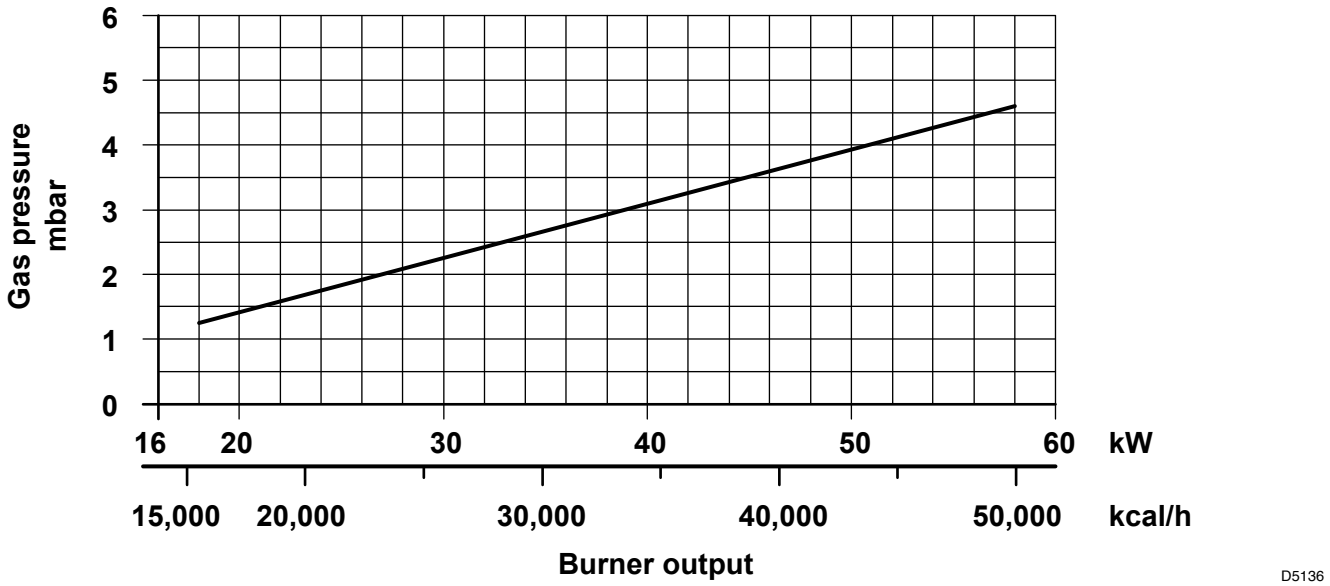

LINE OF GAS-SUPPLY

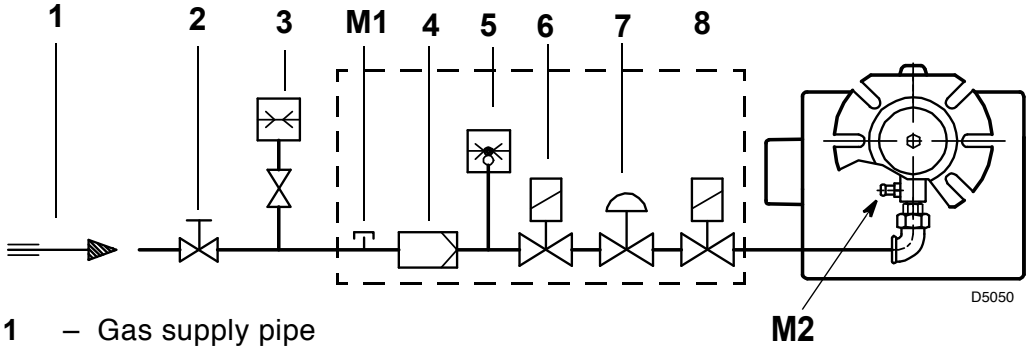

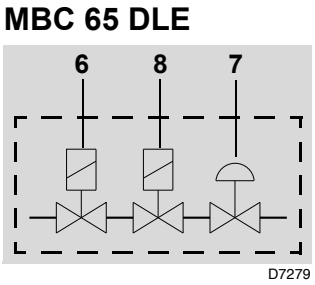

1 – Gas supply pipe
2 – Manual cock *(charged to the installer)*
3 – Gas pressure gauge *(charged to the installer)*
4 – Filter
5 – Gas pressure switch
6 – Safety valve
7 – Pressure governor
8 – Adjusting valve
M1 – Gas-supply pressure test point
M2 – Pressure coupling test point

GAS TRAIN ACCORDING TO EN 676

MULTIBLOC	CODE	CONNECTION		EMPLOY
		GAS TRAIN	BURNER	
MBC 65 DLE	3970569	Rp 1/2	Rp 1/2	Natural gas and LPG
MBDLE 405 B01	3970530	Rp 1/2	Rp 1/2	Natural gas and LPG

The gas train is supplied separately, for its adjustment see the enclosed instructions.

POSITIONING ELECTRODE-PROBE

IMPORTANT

Do not turn the starting electrode but leave it as shown in the drawing; if the starting electrode is put near the ionization probe, the amplifier of the control box might be damaged.

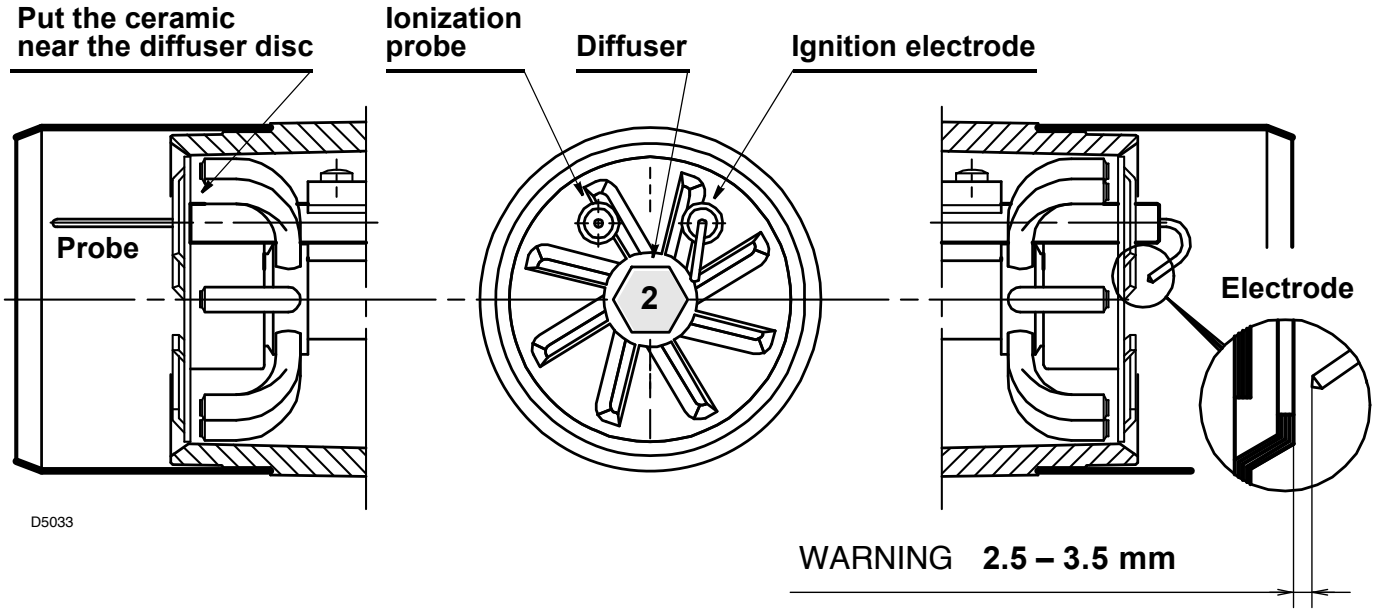

BURNER ELECTRICAL WIRING

(carried out in the factory)

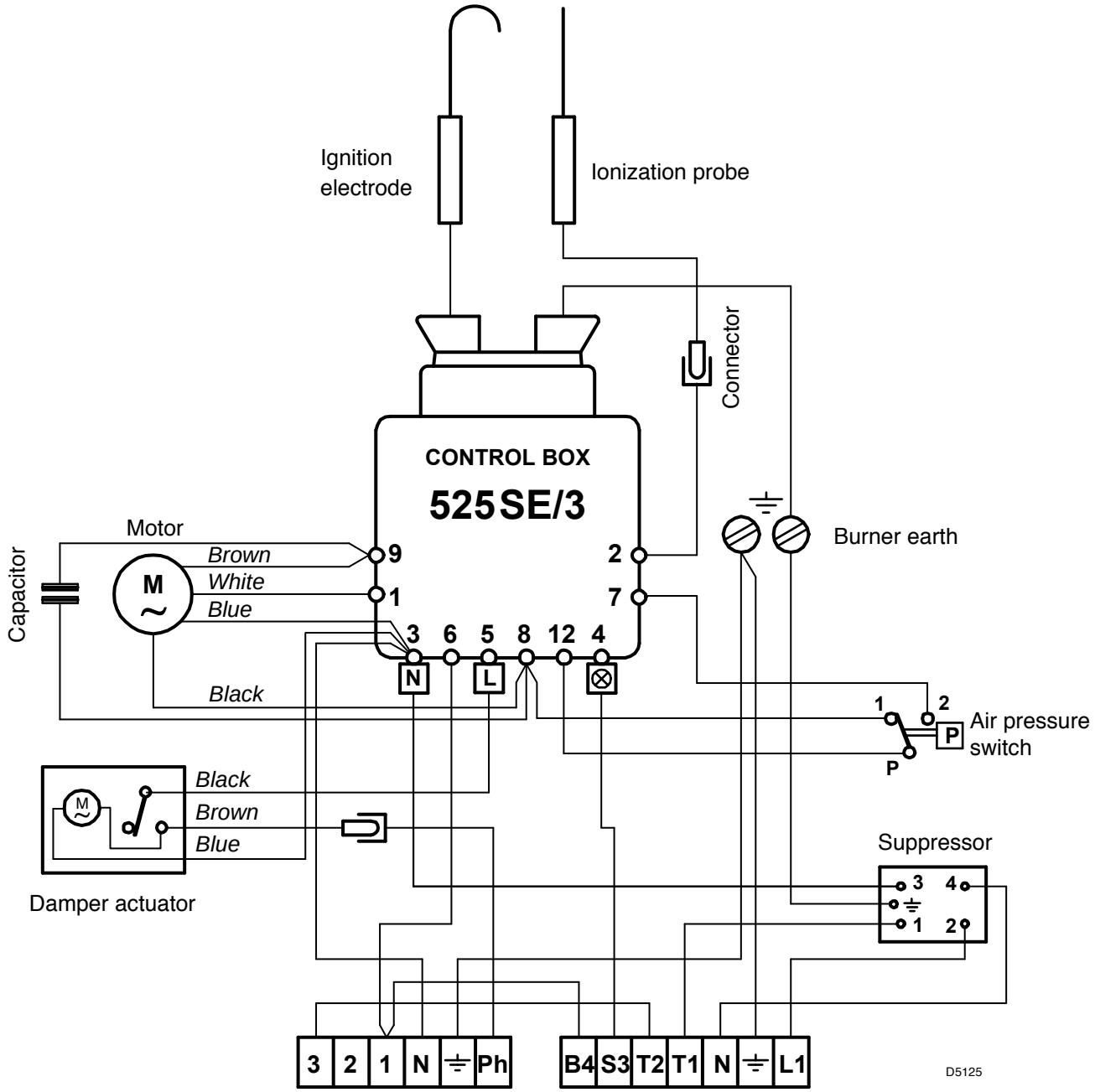

ELECTRICAL WIRING

(to be carried-out by the installer)

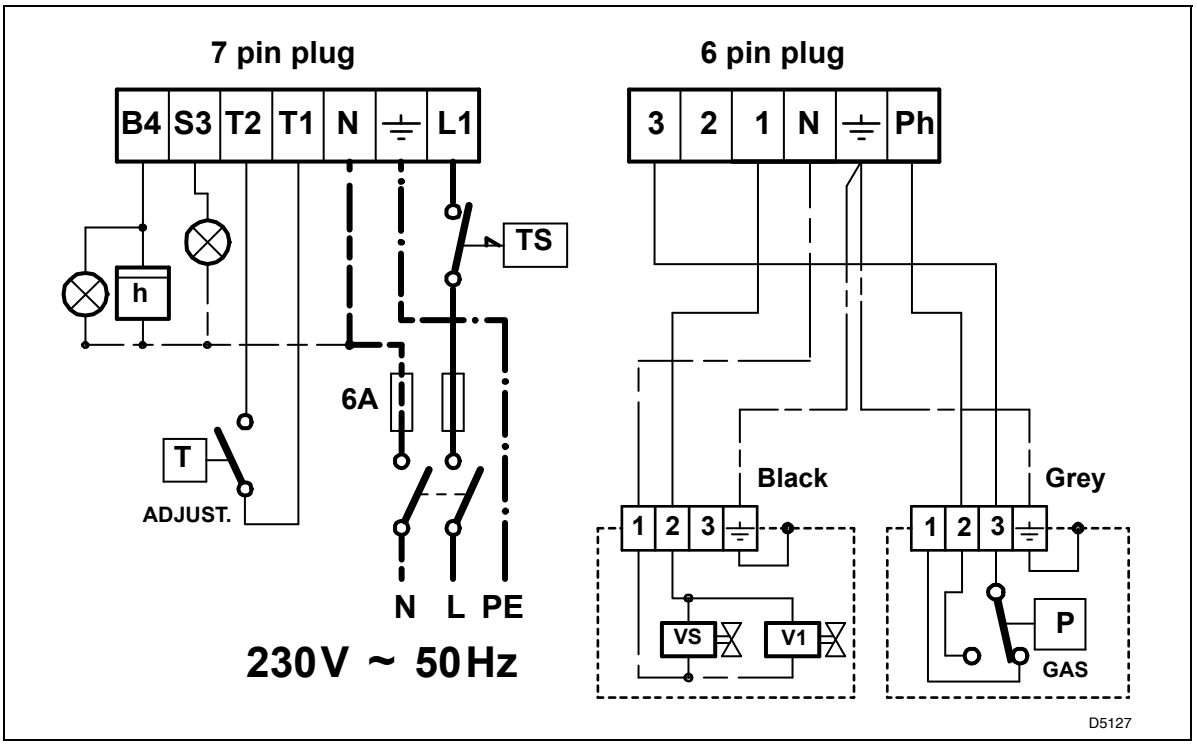

NOTES

- **Do not exchange the neutral with the phase and connect exactly the above wiring.**
- Wire of 1 mm^2 section.
- Carry out a safe earth connection.
- Verify that the burner stops by operating the boiler control thermostats and that the burner goes lock out by separating the red ionisation probe lead connector.
- The electric wiring carried out by the installer must be in compliance with the rules in force in the Country.

BURNER START-UP CYCLE

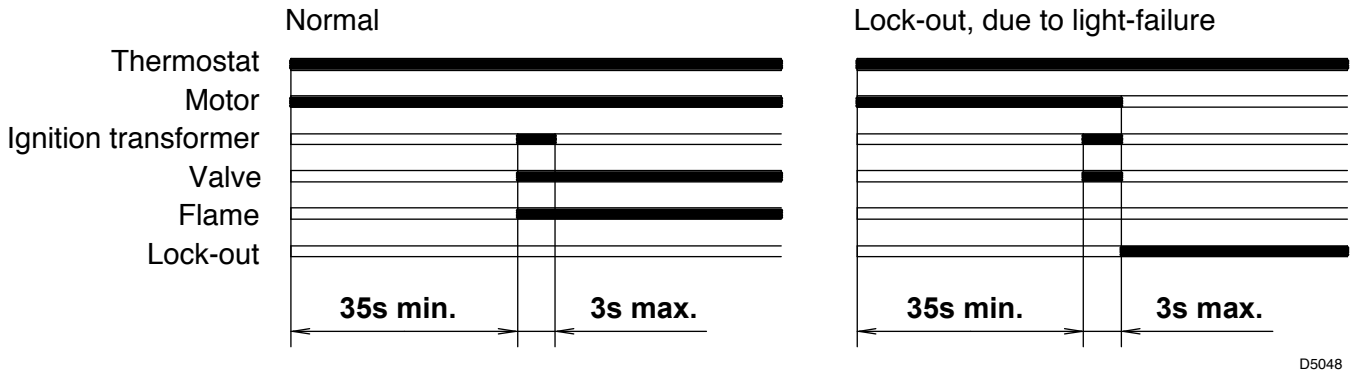

When flame-failure occurs during working, shut down takes place within one second; and the cycle starts again; a lock-out follows if the flame do not start.

AIR DAMPER ADJUSTMENT

The air damper (1) is operated by the motor (2) and assures that the air damper is fully open before the burner start cycle begins .

The regulation of the air plate is made by adjusting the disc (3) after releasing the screws (4).

When optimum setting is reached, tighten the screws (4).

The air damper leaves the factory set at position **3**.

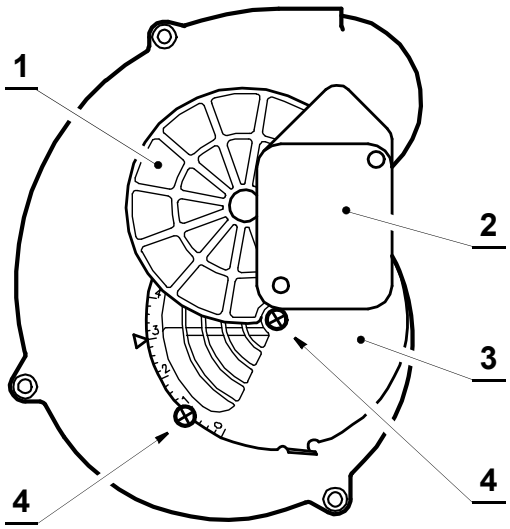

COMBUSTION-HEAD ADJUSTMENT

Loose the screw (A), move the elbow (B) so that the rear plan of the coupling (C) coincides with the set point.

Tight the screw (A).

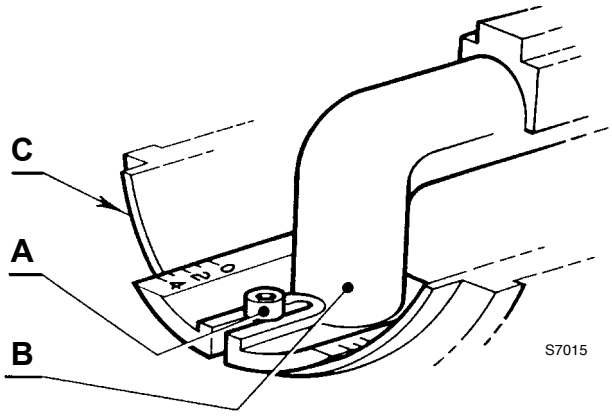

Example:

The burner is installed on a 40 kW boiler with an efficiency of 90%, the burner input is about 44 kW using the diagram below, the combustion set point is **3**.

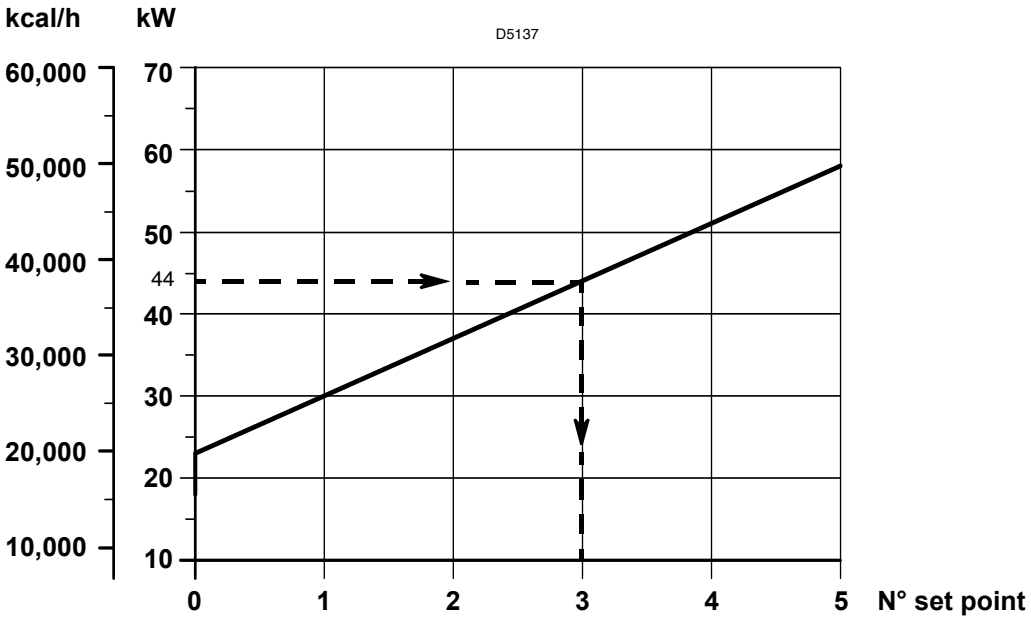

The diagram is to be used only for initial settings, to improve air pressure switch operation or improve combustion, it may be necessary to reduce this setting *(set point toward position **0**).*

COMBUSTION ADJUSTMENT

In conformity with Efficiency Directive 92/42/EEC the application of the burner on the boiler, adjustment and testing must be carried out observing the instruction manual of the boiler, including verification of the CO and CO_2 concentration in the flue gases, their temperatures and the average temperature of the water in the boiler.

It is advisable to set the burner according to the type of gas used and following the indications of the table:

EN 676		AIR EXCESS: max. output $\lambda \leq 1.2$ – min. output $\lambda \leq 1.3$			
GAS	Theoretical max. CO_2 0 % O_2	Setting CO_2 %		CO mg/kWh	NO_x mg/kWh
		$\lambda = 1.2$	$\lambda = 1.3$		
G 20	11.7	9.7	9.0	≤ 100	≤ 170
G 25	11.5	9.5	8.8	≤ 100	≤ 170
G 30	14.0	11.6	10.7	≤ 100	≤ 230
G 31	13.7	11.4	10.5	≤ 100	≤ 230

IONIZATION CURRENT

The minimum current required by the control box is 5 μA.
The burner would normally have a higher current value than this, but if a check is required, open the connector fitted in the red probe lead and insert a microammeter as shown.

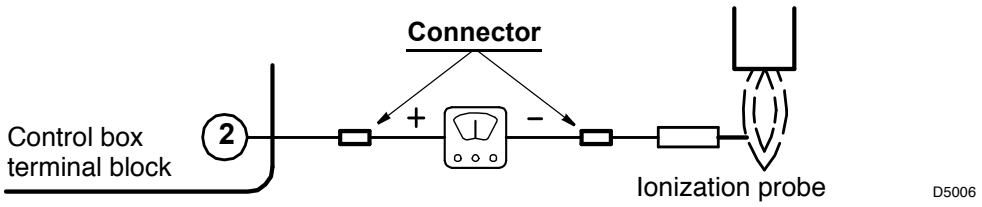

AIR PRESSURE SWITCH

The air pressure switch is set after all other adjustments have been made. Begin with the switch at the lowest setting.

With the burner working at the minimum output, adjust the dial clockwise, increasing its value until the burner shuts down.

Now reduce the value by one set point, turning the dial anti-clockwise.

Check for reliable burner operation, if the burner shuts down, reduce the value by a half set point.

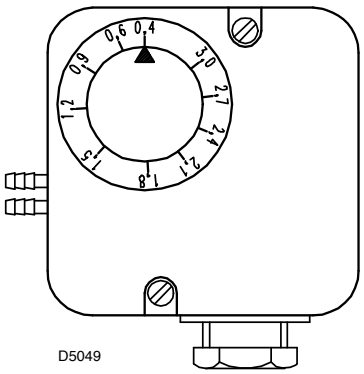

Attention:
To comply with the standard, the air pressure switch must operate when the CO value exceeds 1% (10,000 ppm).
To check this, insert a combustion analyser in the flue, slowly reduce the burner air setting and verify that the burner shuts down by the action of the air pressure switch before the CO value exceeds 1%.

BURNER STARTING DIFFICULTIES AND THEIR CAUSES

DIFFICULTIES	CAUSES
The burner goes through the pre-purge period normally, the flame ignites, but the burner goes to lock-out within 3 seconds after the ignition.	The ionization probe is earthed or not in contact with the flame, or its wiring to the control box is broken, or there is a fault on its insulation to earth.
	The connection of the phase and neutral leads has been inverted: you need to exchange it.
	The wiring to the earth is lacking or ineffective.
The burner goes to lock-out, after the pre-purge period, because the flame does not ignite.	The valves are passing too little gas *(low pressure in the gas pipework).*
	The valves are defective.
	It is irregular or the ignition arc is not present; in this case remove the control box and insert it again, taking care that the electrode push-rod is in the proper seat.
	The pipe has not been purged from the air.
The burner does not pass through the pre-purge period and the control box goes to lock-out.	The air pressure switch does not change over: it has failed or the air pressure is too low *(combustion head bad set).*
	Flame simulation exists *(or the flame really lights).*
The burner does not start at the thermostat closing.	Gas is not supplied.
	The gas pressure switch does not close its contact due to incorrect setting or a faulty switch.
	The air pressure switch is changed over to the operational position.
	The damper actuator is failed.
	Before to replace the control box, check that short-circuits are not present on the power-line: of the motor, of the gas electrovalve/s and on the external signaling devices.
The burner continues to repeat the starting cycle without going on lock-out.	This concerns a very particular irregularity, caused by the fact that the gas pressure in the gas-mains lies very close to the value to which the gas pressure switch has been set. As a result of this, the sudden falling-off of pressure at the opening of the valves causes the opening of the pressure switch. However this only temporarily, because the valves immediately close again, so then does the pressure switch, because the pressure builds-up again the cycle to be repeated over and over. This can be remedied by lowering the setting of the pressure switch.

OPERATING FAULTS

Re-cycle and lock-out may occur, because of : – Flame failure
– Ionization probe earthed

The burner goes to lock-out because of. . . . . : – Opening of the air pressure switch

Burner stop because of . . . . . : – Gas pressure switch opening

说明书的相关信息

引言

说明书随燃烧器一起提供：

- 它是产品不可或缺的组成部分，不得将其与产品分离；因此必须小心保存以便查阅，如果将燃烧器转给另一个用户或转移至另一个系统，则说明书必须跟随燃烧器一起转移。如果说明书损坏或丢失，则必须从您就近的 Technical Assistance Centre （技术支持中心）索取说明书的复本 RIELLO；
- 说明书只能由有资格的人员使用；
- 说明书提供了有关燃烧器安装、启动、使用和维护的重要指示和安全警告。

系统和说明书的交付

一旦交付系统：

- 系统制造商也必须将说明书交付给用户，并建议其将说明书保存在热发生器的安装区域附近。
- 说明书上显示：
  - 燃烧器的序列号；

    .....

  - 最近 Assistance Centre （支持中心）的地址和电话号码；

    .....

    .....

    .....

- 系统制造商必须告知用户有关以下内容的准确信息：
  - 系统的使用；
  - 启动系统前需要进行的测试；

- 必需的维护和检查 （每年必须由制造商代表或别的专业技术人员至少检查系统一次）。

要保证定期检查，RIELLO 建议遵照 Maintenance Contract （维护合同）的规定。

技术参数

燃烧器出力		18 – 58 kW – 15,500 – 50,000 kcal/h
燃气 (品种 2)	净热值	8 – 12 kWh/m³ – 7,000 – 10,340 kcal/m³
	压力	min. 20 mbar – max. 35 mbar
电源		单相， 230 V ± 10% ~ 50Hz
马达		230 V / 0.65 A
马达启动电容		2 µF
点火变压器		初级 230 V / 0.2 A – 次级 8 kV
电功耗		0.11 kW

对燃用 LPG 可选特殊附件 .

国家	DE	DK - AT - GR - SE	GB - IE	LU
燃气种类	II2ELL3B/P	II2H3B/P	II2H3P	II2E3B/P

- 燃烧器保护等级为 IP X0D (IP 40), EN 60529.
- 燃烧器符合下列标准 : EMC 89/336/EEC - 2004/108/EC, 低电压 73/23/EEC - 2006/95/EC, 机械 98/37/EEC 和 效率 92/42/EEC.
- 燃气阀组符合 EN 676 标准 .

图 . 1

1 – 风门挡板
2 – 固定风门的螺钉
3 – 燃气阀组 6 孔插头
4 – 电气连接用 7 孔插座
5 – 电缆垫圈
6 – 固定外壳的螺钉
7 – 锁定指示灯和复位按钮

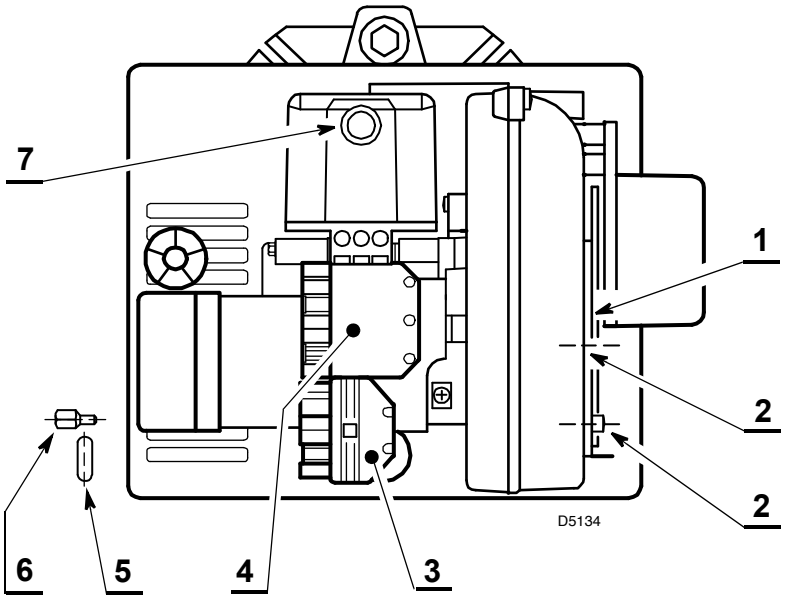

注意
电缆垫圈 (5) 和外壳固定螺钉 (6) 必须与燃气阀组在同一侧 .

外观尺寸

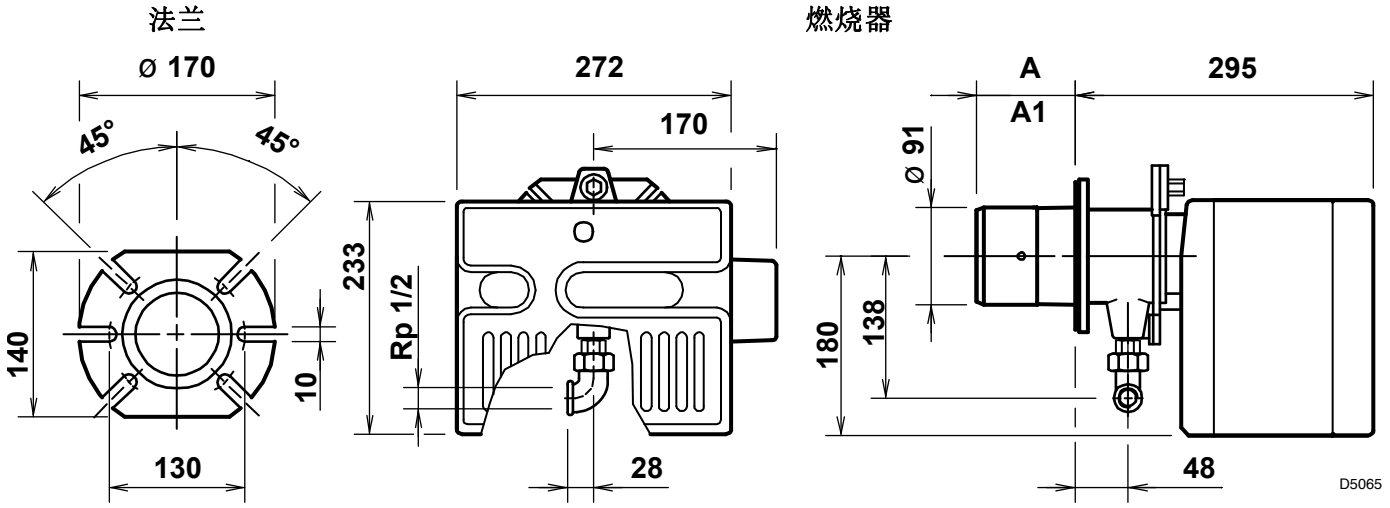

A	A1 – 加长燃烧头长度
100	125

燃烧器随机附件

数量	描述
1	7 针插头
4	螺钉及螺母
1	绝热垫片
1	固定外壳用螺钉
1	电缆垫圈
1	铰链

燃烧器安装

移开螺母 (1) 及拆下部分 **(A)** 后将燃烧头组件从燃烧器上移开 .

在燃烧器头部 **(B)** 安装上绝热垫 (3) 后与锅炉 (2) 紧固连接 .

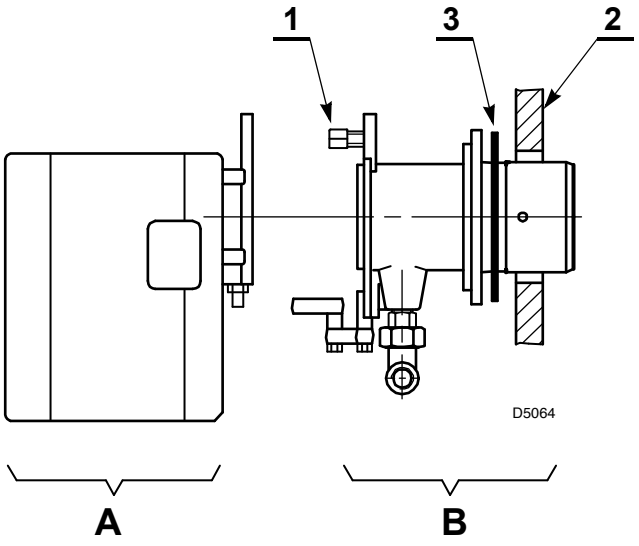

铰链装配

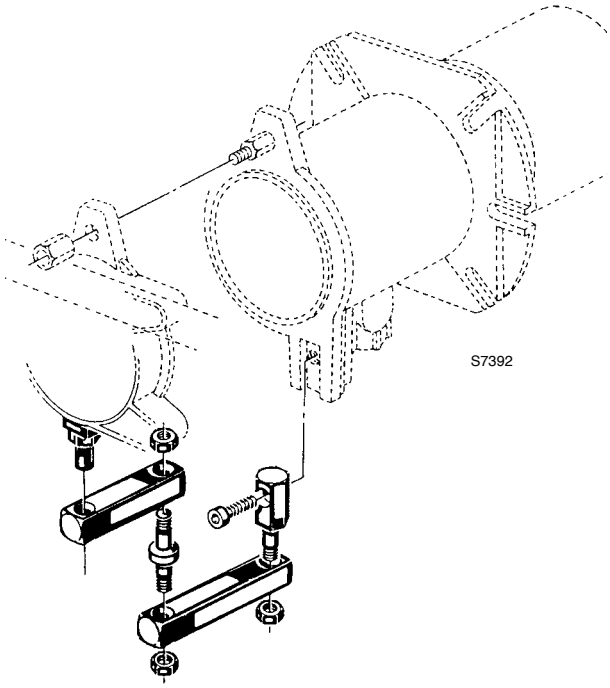

工作范围

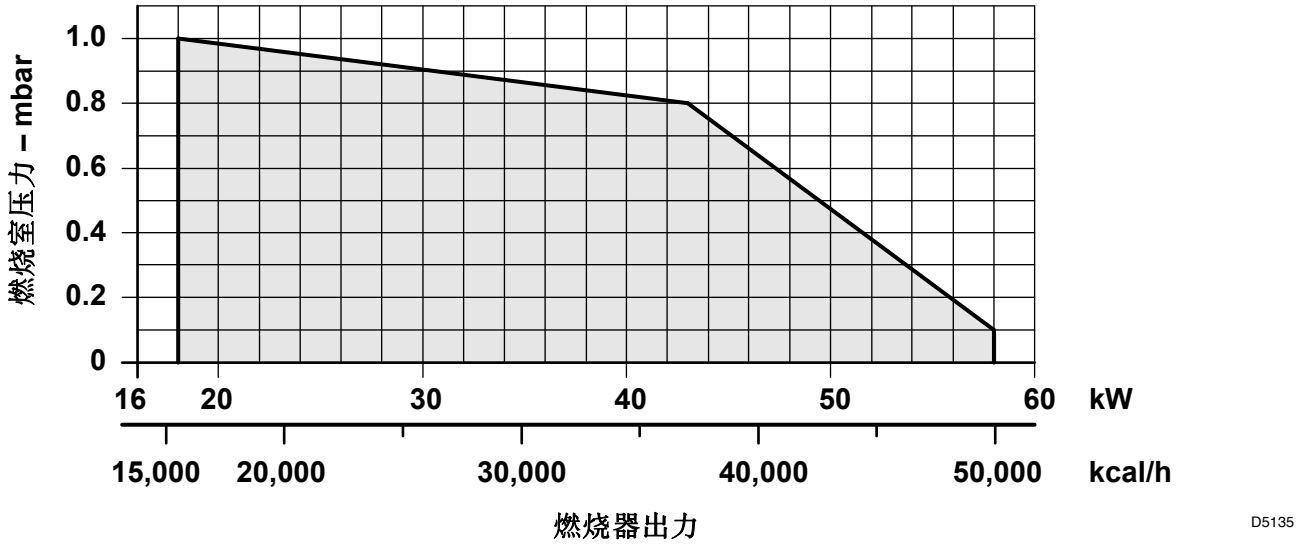

实验锅炉

以上工作曲线是用符合 DIN 4788 和 EN 676 标准的锅炉测量得到 .

商用锅炉

如果锅炉的设计和制造是符合 EN 303 标准，且燃烧室尺寸与 EN 676 标准中的图表所示相近时，则燃烧器与锅炉是匹配的 .

如果锅炉的设计和制造不符合 EN 303 标准，且燃烧室尺寸比 EN 676 标准中的图表所示的尺寸更小 ，则请咨询生产厂家 .

燃气压力与燃烧器出力的关系

在用净热值为 10 kWh/m3 (8.570 kcal/m3) 的 G20 燃气和锅炉背压在 0 mbar 进行测量时，燃烧器最大出力时燃烧器头的压降为 4.6 mbar .

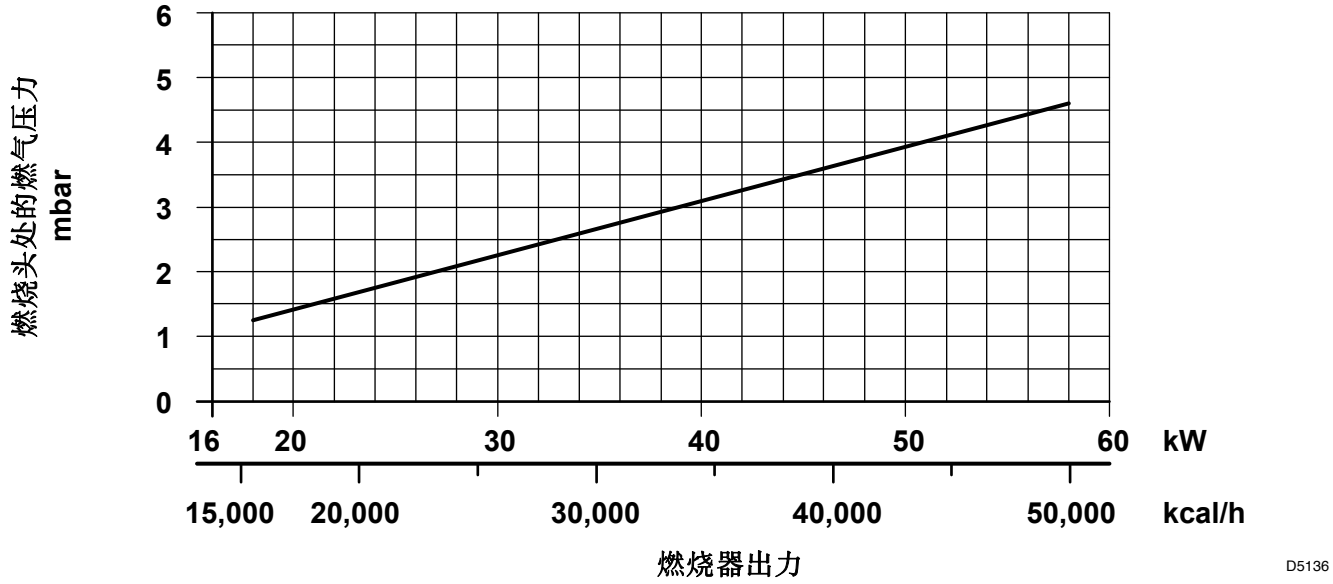

燃气管线

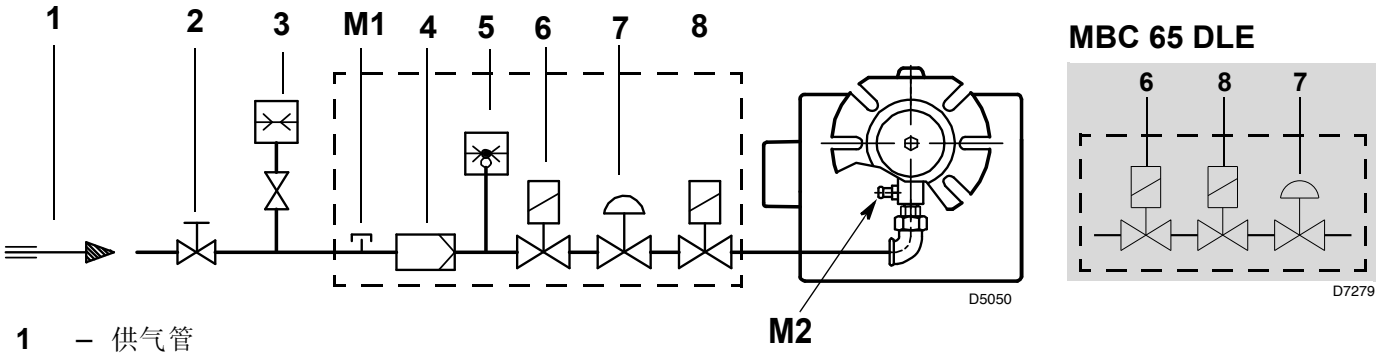

1 – 供气管
2 – 手动球阀（*安装者负责*）
3 – 燃气压力表（*安装者负责*）
4 – 过滤器
5 – 燃气压力开关
6 – 安全阀
7 – 稳压器
8 – 调节阀
M1 – 供气压力测试点
M2 – 燃气阀组后压力测点

符合 EN 676 标准的燃气阀组

MULTIBLOC	编码	连接方式		应用
		燃气阀组	燃烧器	
MBC 65 DLE	3970569	Rp 1/2	Rp 1/2	天然气和 LPG
MBDLE 405 B01	3970530	Rp 1/2	Rp 1/2	天然气和 LPG

燃气阀组单独提供，它的调整参考附带的说明书．

离子探针和点火电极定位

重要：
不要转动点火电极使它保持在如图所示的位置；若点火电极与离子探针距离过近，控制盒内的放大器有可能会损坏．

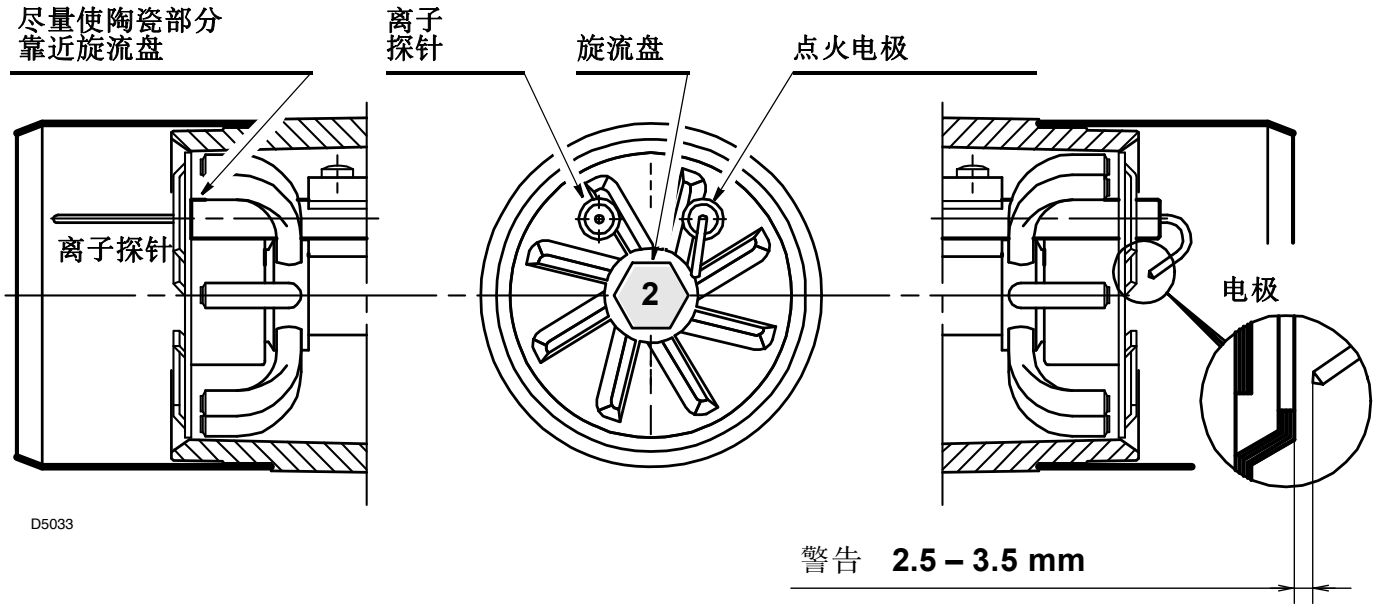

燃烧器电气连接
(厂家设置)

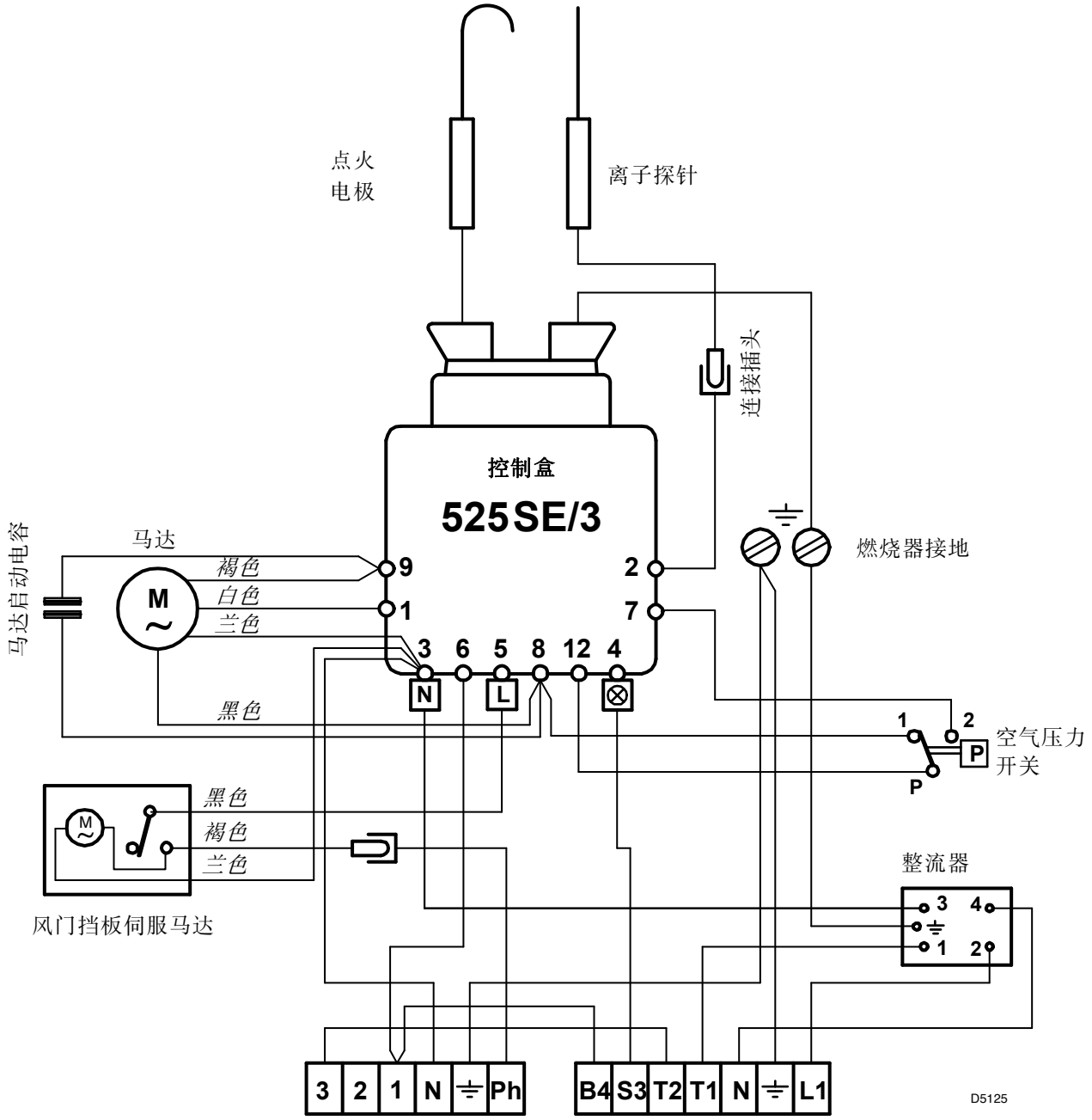

电气连接
(由安装方负责)

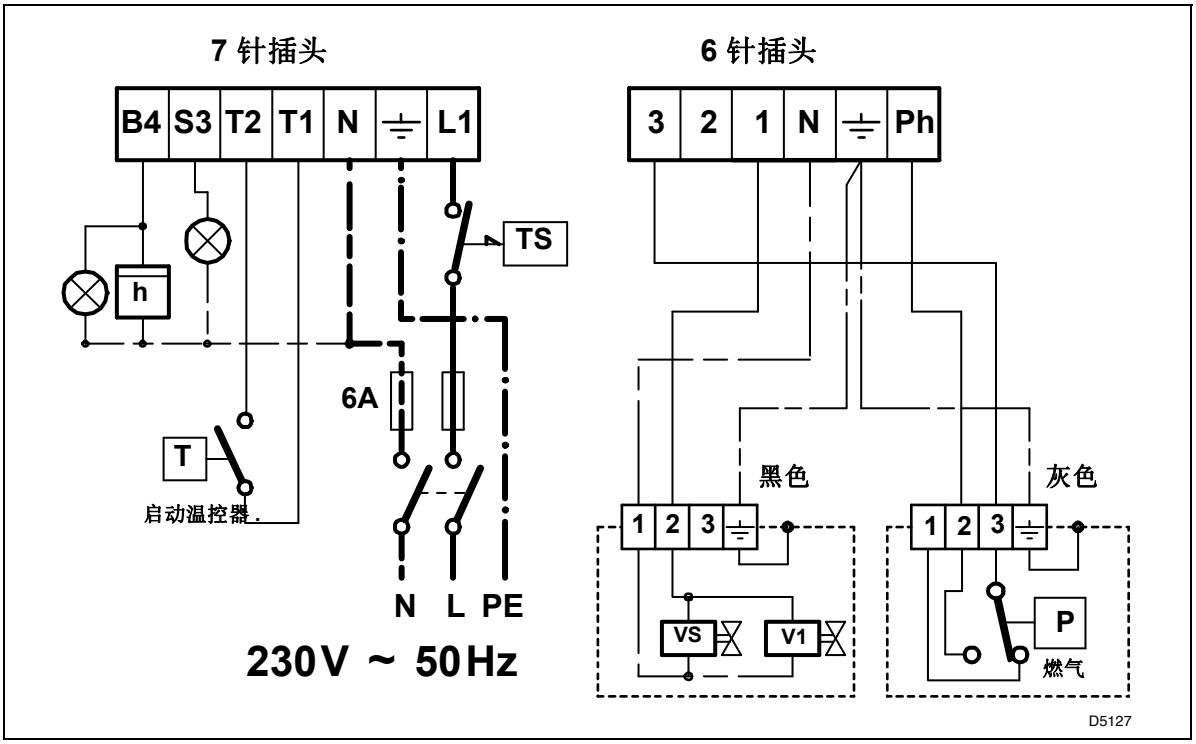

注意

- **不要将零线和火线接反并正确连接上述接线 .**
- 电线截面积为 1 mm^2 .
- 接地应良好 .
- 测试当断开温控器开关，检查燃烧器是否停机 ； 当 断开连接器 (C) 与控制盒的连接，检查燃烧器是否锁定 .
- 有安装方负责的电线连接必须符合所在国家的强制规定

燃烧器启动程序

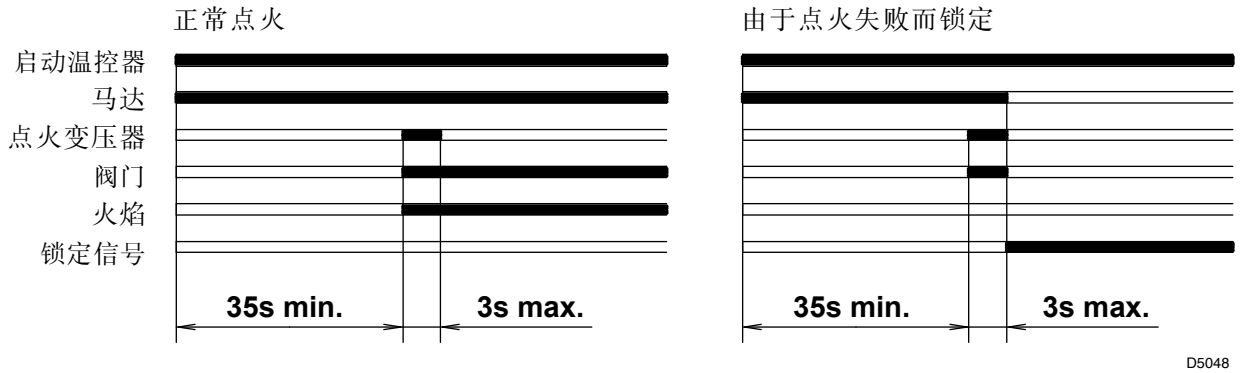

在燃烧器运行时火焰消失 , 燃烧器在 1 秒内停机并再次进行点火程序 , 如无火焰出现则燃烧器锁定 .

风门挡板的调节

风门挡板 (1) 是由伺服马达 (2) 控制并确保在燃烧器启动程序开始时风门挡板完全打开 .

拧松螺钉 (4) 后 , 通过调整固定风门 (3) 来控制风门挡板的进风量 .

当达到合适的风门开度 , 拧紧螺钉 (4).

出厂时风门挡板设置为 **3**.

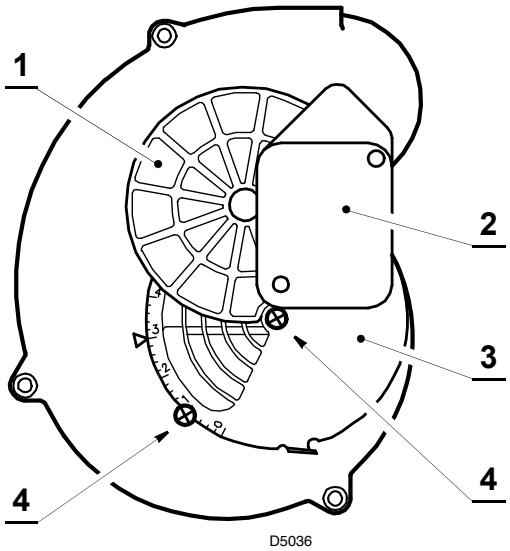

燃烧头设置

拧松螺钉 (A), 移动肘型弯管 (B) 使 之与连接器 (C) 的端面对齐到相应的刻度 .

拧紧螺钉 (A).

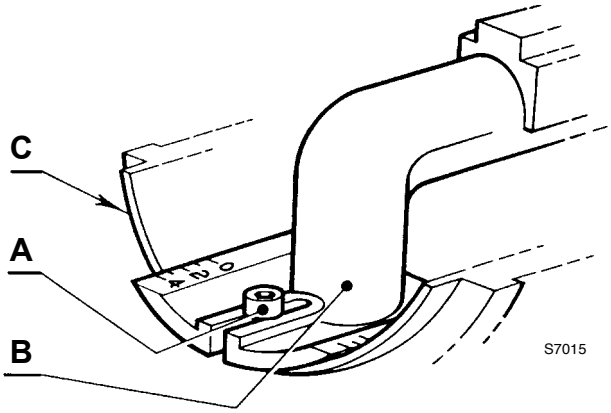

示例 :

燃烧器安装在 出力为 40 kW 的锅炉上 .
锅炉效率为 90%, 燃烧器出力应为 44 kW. 如图所示 , 燃烧器燃烧头应设在 刻度 **3**.

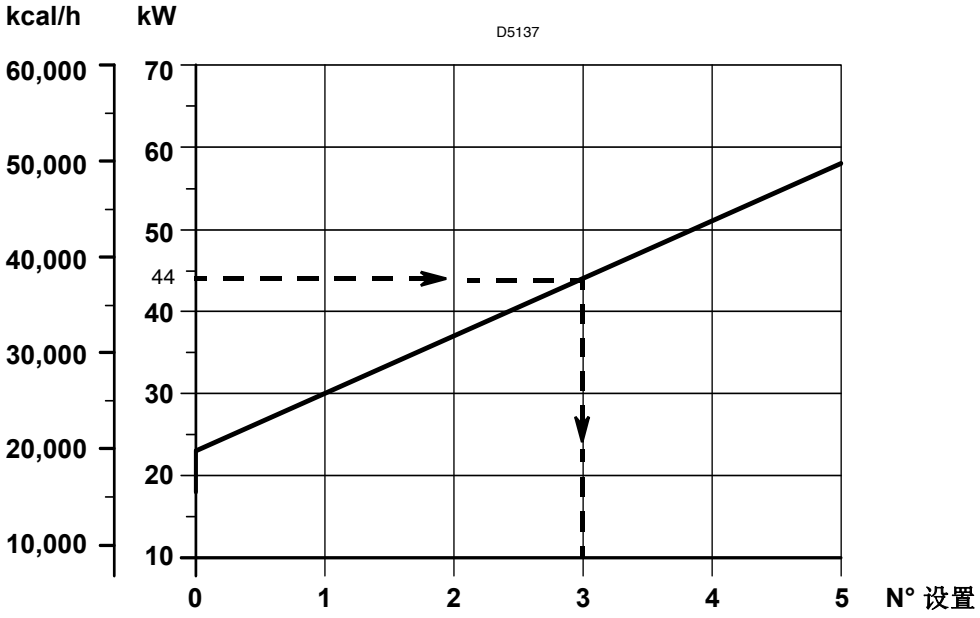

此图表一般在初步设定时参照使用 , 为了改变空气压力开关 或改善燃烧 , 如需要可减少该设置 (向 0 的位置方向调节).

燃烧调节

根据燃烧器运用于锅炉上的效率标准 92/42/EEC，调试燃烧器必须参考锅炉的使用说明书，这一工作包括调整烟气中的 CO 和 CO2 含量，烟温及锅炉的平均水温 .

建议根据燃气种类和下表所示参数来初步设定燃烧器：

EN 676		过量空气系数：最大输出 λ ≤ 1.2 – 最小输出 λ ≤ 1.3			
燃气	最大 CO_2 0 % O_2	设定 CO_2 %		CO mg/kWh	NO_x mg/kWh
		λ = 1.2	λ = 1.3		
G 20	11.7	9.7	9.0	≤ 100	≤ 170
G 25	11.5	9.5	8.8	≤ 100	≤ 170
G 30	14.0	11.6	10.7	≤ 100	≤ 230
G 31	13.7	11.4	10.5	≤ 100	≤ 230

离子探针电流

燃烧器正常运行时控制器所需最小离子探针电流为 5 μA.
一般情况下离子探针电流会远大于该值，不必检查 . 如需要检查时，可断开离子探针连接插头串入微安电流表 .

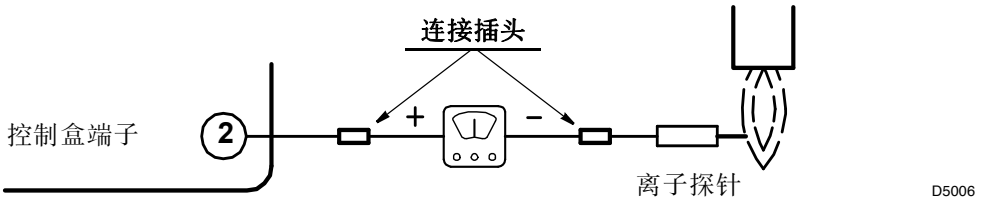

空气压力开关

空气压力开关的调整工作应在燃烧器的上述调整工作完成后进行，此时空气压力开关的设定值应在初始位置 .
燃烧器工作在额定出力时，缓慢顺时针加大设定值，直至燃烧器锁定 .
然后将设定值逆时针旋转减少 1 个刻度值，并再次检查燃烧器是否能正常启动 . 如燃烧器锁定，应再少量减少空气压力开关的设定值 .

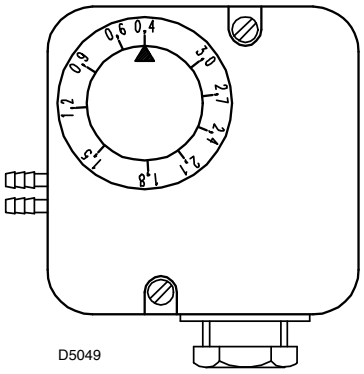

注意：
作为标准条例，空气压力开关调整要防止当空气压力达到设定值的 80% 时排烟中的 CO 超过 1% (10,000 ppm).
如要检查这一点，请在烟囱中插入烟气分析仪，缓慢关闭风机的进气口（例如用纸板）并检查燃烧器在排烟中的 CO 超过 1% 之前是否会锁定 .

燃烧器启动故障 及可能的原因

故障	可能的原因
在预吹扫及点火周期时燃烧器运行正常，但 3 秒后锁定 .	离子探针接地，离子探针未与火焰接触，离子探针与控制盒连线断开，与地短路 .
	火线与零线接反：需要重接 .
	没有地线或接地不良 .
燃烧器在预吹扫后因火焰故障而锁定 .	燃气阀组过气量太小 *(燃气管线压力太低).*
	燃气阀组故障 .
	点火脉动或失败；这样可移下控制盒并再装回去，注意点火电极在正确的位置 .
	燃气管道内空气未排净 .
燃烧器在预吹扫时锁定 .	空气压力开关不切换：空气压力开关损坏或空气压力太低 *(燃烧头设置不当).*
	虚假火焰 *(或有实际火焰出现).*
当启动温控器闭合时，燃烧器不启动 .	没有燃气供应 .
	由于燃气压力设置不当或 损坏造成燃气压力开关不闭合 .
	空气压力开关在运行位置 .
	风门伺服马达故障 .
	在更换控制盒之前，检查在供电回路没有短路情况出现：马达，燃气阀组电磁阀 和外部控制设备 .
燃烧器不锁定，重复启动 .	主燃气压力接近于最低燃气压力开关所设定的数值 . 燃气阀组开启后造成压力降低从而引起压力开关的断开 . 燃气阀组立刻关闭，燃烧器停机 . 压力又升高，压力开关再次闭合，又重复点火周期，该过程没有休止地进行 . 降低燃气压力开关的设定值以避免该故障 .

运行中故障

重复启动并锁定，原因 : – 火焰消失
– 离子探针接地

燃烧器锁定 . . . . . : – 空气压力开关断开

燃烧器停机 . . . . . : – 燃气压力开关断开

Registered Office - 公司注册所在地：
RIELLO S.p.A.
I-37045 Legnago (VR)
Tel.: +39.0442.630111
http:// www.riello.it
http:// www.rielloburners.com

Manufacturing site:
Riello Heating Equipment (Shanghai) CO., LTD
No. 388, Jinbai Road - Jinshan Industrial Zone
201506 - Shanghai
CHINA

生产场所：
Riello Heating Equipment (Shanghai) CO., LTD
利雅路热能设备（上海）有限公司
上海市金山工业区金百路 388 号