Installation, use and maintenance instructions
安装，使用和维护说明书

RIELLO

GB

Forced draught gas burners

CN

强制通风燃气燃烧器

Progressive two-stage operation
一两段火运行

RS

CODE - 编码	MODEL - 型号	TYPE - 类型
20033795	RS 34 MZ	883 T
20033809	RS 44 MZ	884 T
20033835	RS 44 MZ	884 T

20033805 (1) - 03/2011

IDENTIFICATION

The Identification Plate on the product gives the serial number, model and main technical and performance data. If the Identification Plate is tampered with, removed or missing, the product cannot be clearly identified, thus making any installation or maintenance work potentially dangerous.

GENERAL WARNINGS

The dimension of the boiler's combustion chamber must respond to specific values, in order to guarantee a combustion with the lowest polluting emissions rate.
You are therefore advised to consult the Technical Assistance Department before choosing this type of burner for the combination with a boiler.
Qualified personnel are those with the professional and technical requirements indicated by Law no. 46 dated 5 March 1990. The commercial organisation has a widespread network of agencies and technical offices whose personnel participates periodically in instructional and refresher courses at the company training centre.
This burner must only be used for the application it was designed for.
The manufacturer cannot accept responsibility for any damage to persons, animals or property due to errors in installation or in the burner adjustment, or due to improper or unreasonable use or non-observance of the technical instructions enclosed with the burner, or due to the intervention of unqualified personnel.

USER INFORMATION

If faults arise in firing or operation, the burner performs a "safety stop", which is signalled by the red burner lockout LED. To rearm start-up conditions, press the reset button. When the burner starts up again, the red LED goes out.
This operation can be repeated for a maximum of 3 times. If the "safety stop" recurs, then the Technical Assistance Centre must be contacted.

BASIC SAFETY MEASURES

- ➤ Children or inexpert persons must not use the appliance.
- ➤ Under no circumstances must the intake grids, dissipation grids and ventilation vents in the installation room be covered up with cloths, paper or any other material.
- ➤ Unauthorised persons must not attempt to repair the appliance
- ➤ It is dangerous to pull or twist the electric leads.
- ➤ Cleaning operations must not be performed if the appliance is not disconnected from the main power supply.
- ➤ Do not clean the burner or its parts with inflammable substances (e.g. petrol, alcohol, etc.).
  The cover must be cleaned with soapy water.
- ➤ Do not place anything on the burner.
- ➤ Do not leave containers and inflammable products in the installation room.

The following symbols are used in this manual:

⚠ **ATTENTION =** for actions requiring special care and adequate preparation.

⛔ **FORBIDDEN =** for actions **THAT MUST NOT** be performed.

GB **INDEX**

N.B.
Figures mentioned in the text are identified as follows:
1)(A) = part 1 of figure A, same page as text;
1)(A)p.4 = part 1 of figure A, page number 4.

INFORMATION ABOUT THE INSTRUCTION MANUAL

INTRODUCTION

The instruction manual supplied with the burner:
- is an integral and essential part of the product and must not be separated from it; it must therefore be kept carefully for any necessary consultation and must accompany the burner even if it is transferred to another owner or user, or to another system. If the manual is lost or damaged, another copy must be requested from the Technical Assistance Service RIELLO of the area;
- is designed for use by qualified personnel;
- offers important indications and instructions relating to the installation safety, start-up, use and maintenance of the burner.

DELIVERY OF THE SYSTEM AND THE INSTRUCTION MANUAL

When the system is delivered, it is important that:
- The instruction manual is supplied to the user by the system manufacturer, with the recommendation to keep it in the room where the heat generator is to be installed.
- The instruction manual shows:
  - the serial number of the burner;

    .....

  - the address and telephone number of the nearest Assistance Centre;

    .....
    .....
    .....

- The system supplier carefully informs the user about:
  - the use of the system,
  - any further tests that may be necessary before the system is started up,
  - maintenance and the need to have the system checked at least once a year by the manufacturer or another specialised technician.

    To ensure a periodic check, RIELLO recommends the drawing up of a Maintenance Contract.

TECHNICAL DATA

MODEL			RS 34 MZ		RS 44 MZ		RS 44 MZ	
TYPE			883 T		884 T		884 T	
OUTPUT (1)	2nd stage	kW Mcal/h	125 - 390 108 - 336		203 - 550 175 - 473		203 - 550 175 - 473	
	min. 1st stage	kW Mcal/h	45 39		80 69		80 69	
FUEL			NATURAL GAS: G20 - G21 - G22 - G23 - G25					
			G20	G25	G20	G25	G20	G25
- net calorific value		kWh/Sm^3 Mcal/Sm^3	9.45 8.2	8.13 7.0	9.45 8.2	8.13 7.0	9.45 8.2	8.13 7.0
- absolute density		kg/Sm^3	0.71	0.78	0.71	0.78	0.71	0.78
- max delivery		Sm^3/h	41	48	58	67.6	58	67.6
- pressure at max. delivery (2)		mbar	13.1	18.4	16.7	23.2	16.7	23.2
OPERATION			• Intermittent (min. 1 stop in 24 hours) • Two-stage (high and low flame) and one-stage (all - nothing)					
STANDARD APPLICATION			Boilers: water, steam, diethermic oil					
AMBIENT TEMPERATURE		°C	0 - 40					
COMBUSTIVE AIR TEMPERATURE		°C max	60					
ELECTRICAL SUPPLY		V Hz	230 ~ +/-10% 50/60 - single-phase				230 - 400 with neutral ~ +/-10% 50/60 - three-phase	
ELECTRICAL MOTOR		rpm W V	2800/3400 300 220 - 240		2820/3400 420 220 - 240		2820/3400 450 220/240-380/415	
ACCELERATION CURRENT		A	15		17		14 - 10	
OPERATION CURRENT		A	3.2		3.5		2 - 1.4	
MOTOR CAPACITOR		mF/V	12.5/400		12.5/425		-	
IGNITION TRASFORMER		V1 - V2 I1 - I2	230 V - 1 x 15kV 1 A - 25mA					
ELECTRICAL POWER CONSUMPTION		W max	600		700		800	
NOISE (3)	SOUND PRESSURE SOUND POWER	dBA	68 79		70 81		70 81	

(1) Reference conditions: Room temperature 20°C - Gas temperature 15°C - Barometric pressure 1013 mbar - Altitude 0m above sea level.
(2) Socket pressure 7)(A)p.4 with zero pressure in the combustion chamber.
(3) Noise emission tests carried out as specified in EN 15036-1 with measurement accuracy σ = ± 1.5 dB, in the manufacturer's combustion chamber with burner operating on test boiler at maximum output.

VARIANTS

MODEL	POWER SUPPLY	LENGTH BLAST TUBE mm
RS 34 MZ	Single phase Single phase	216 351
RS 44 MZ	Single phase Single phase Three phase Three phase	216 351 216 351

GAS CATEGORY

Category	Country
I2E(R)	BE
I2H	LV
I3B/P	CY, MT
I3P	BE
II2E3B/P	LU, PL
II2ELL3B/P	DE
II2Er3P	FR
II2H3B/P	AT, CH, CZ, DK, EE, FI, GR, HU, IS, IT, LT, NO, SE, SI, SK
II2H3P	ES, GB, IE, PT
II2L3B/P	NL

ACCESSORIES (optional):

• RADIO DISTURBANCEPROTECTION KIT

If the burner is installed in places particularly subject to radio disturbance (emission of signals exceeding 10 V/m) owing to the presence of an INVERTER, or in applications where the length of the thermostat connections exceeds 20 metres, a protection kit is available as an interface between the control box and the burner.

BURNER	**RS 34-44 MZ**
Code	3010386

• KIT LONG HEAD

BURNER	**RS 34 MZ**	**RS 44 MZ**
Code	3010428	3010429

• KIT FOR LPG OPERATION: the kit allows the RS 34-44 MZ burners to operate on LPG.

BURNER	**RS 34 MZ**	**RS 44 MZ**
Output kW	80/125 - 390 kW	120/200 - 530kW
Blast tube length mm	216 - 351	216 - 351
Code	3010423	3010424

• KIT MAXIMUM GAS PRESSURE SWITCH	Cod. 3010418
• KIT CLEAN CONTACTS	Cod. 3010419
• KIT POST-PURGING	Cod. 3010452
• KIT GROUND FAULT INTERRUPTER	Cod. 3010448
• KIT CONTINUOUS PURGING	Cod. 3010449
• KIT HOURCOUNTER	Cod. 3010450
• KIT INTERFACE ADAPTER RMG TO PC	Cod. 3002719

• GAS TRAINS TO COUPLE WITH THE BURNER, ACCORDING TO REGULATION EN 676 (complete with valves, pressure adjuster andfilter): see page 9.

NOTE: The installer is responsible for the addition of any safety device not foreseen in this manual.

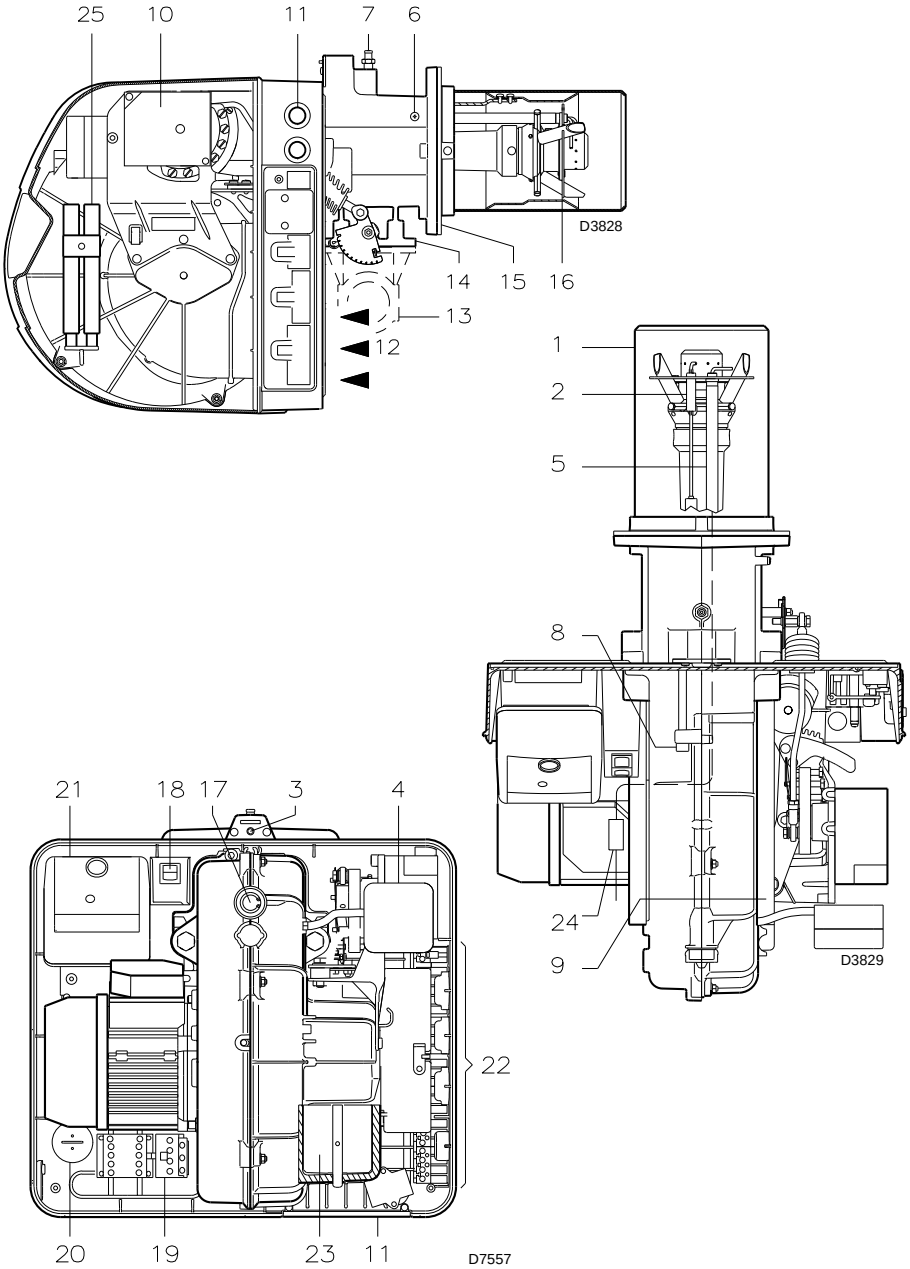

(A)

mm	A	B	C	kg
RS 34 MZ	1000	500	485	32
RS 44 MZ	1000	500	485	33

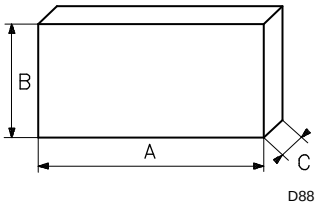

(B)

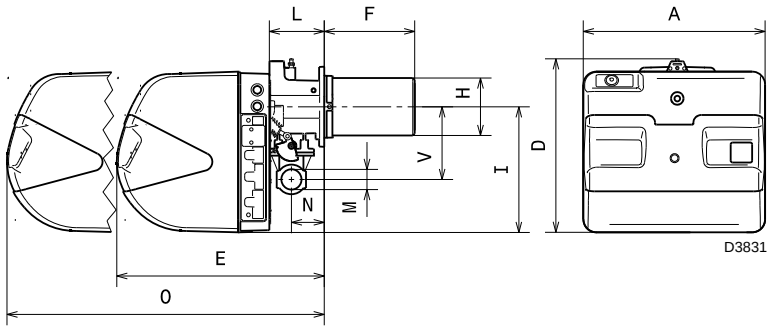

(C)

mm	A	D	E	F (1)	H	I	L	O	N	V	M
RS 34 MZ	442	422	508	216-351	140	305	138	780	84	177	1”1/2
RS 44 MZ	442	422	508	216-351	152	305	138	780	84	177	1”1/2

(1) Blast tube: short - long

BURNER DESCRIPTION (A)

1 Combustion head
2 Ignition electrode
3 Screw for combustion head adjustment
4 Minimum air pressure switch (differential operating type)
5 Flame sensor probe
6 Air pressure test point
7 Gas pressure test point and head fixing screw
8 Screws securing fan to pipe coupling
9 Guides for opening the burner and inspecting the combustion head
10 Servomotor controlling the gas butterfly valve and of air damper (by means of a variable profile cam mechanism).
When the burner is stopped, the air damper will be completely closed to reduce heat loss due to the flue draught, which tends to draw air from the fan air suction inlet.
11 Areas for passage of electric cables
12 Air inlet to fan
13 Gas input pipework
14 Gas butterfly valve
15 Boiler mounting flange
16 Flame stability disk
17 Flame inspection window
18 Two switches:
- one “burner off - on”
- one for “1st - 2nd stage operation”
19 Motor contact maker and thermal cut-out with reset button (RS 44 MZ three-phase)
20 Motor capacitor (RS 34-44 MZ single-phase)
21 Control box with lockout pilot light and reset button
22 Sockets for electrical wiring
23 Air damper
24 Plug-socket on ionisation probe cable
25 Guide extensions (long head version)

Two types of burner lockout may occur:

- **CONTROL BOX LOCKOUT:**
  if the control box 21)(A) pushbutton lights up, it indicates that the burner is in lockout.
  To reset, press the push button.
- **MOTOR LOCKOUT** (RS 44 MZ three-phase): three-phase electrical supply; to reset, press the thermal cut-out switch 19)(A).

PACKAGING - WEIGHT (B) - Approximate measurements

- The burners are shipped in cardboard boxes with the overall dimensions shown in tab. (B).
- The weight of the burner complete with packaging is indicated in tab. (B).

OVERALL DIMENSIONS (C)

Approximate measurements
The overall dimensions of the burner are given in (C).
Bear in mind that, in order to inspect the combustion head, the burner must be pulled back.

STANDARD EQUIPMENT

1 - Gas train flange
1 - Flange gasket
4 - Flange fixing screws M 8 x 25
4 - Screws to secure the burner flange to the boiler: M 8 x 25
1 - Thermal insulation screen
3 - Plugs for electrical connection (RS 34-44 MZ single-phase)
4 - Plugs for the electrical connection (RS 44 MZ three-phase)
1 - Instruction booklet
1 - Spare parts list

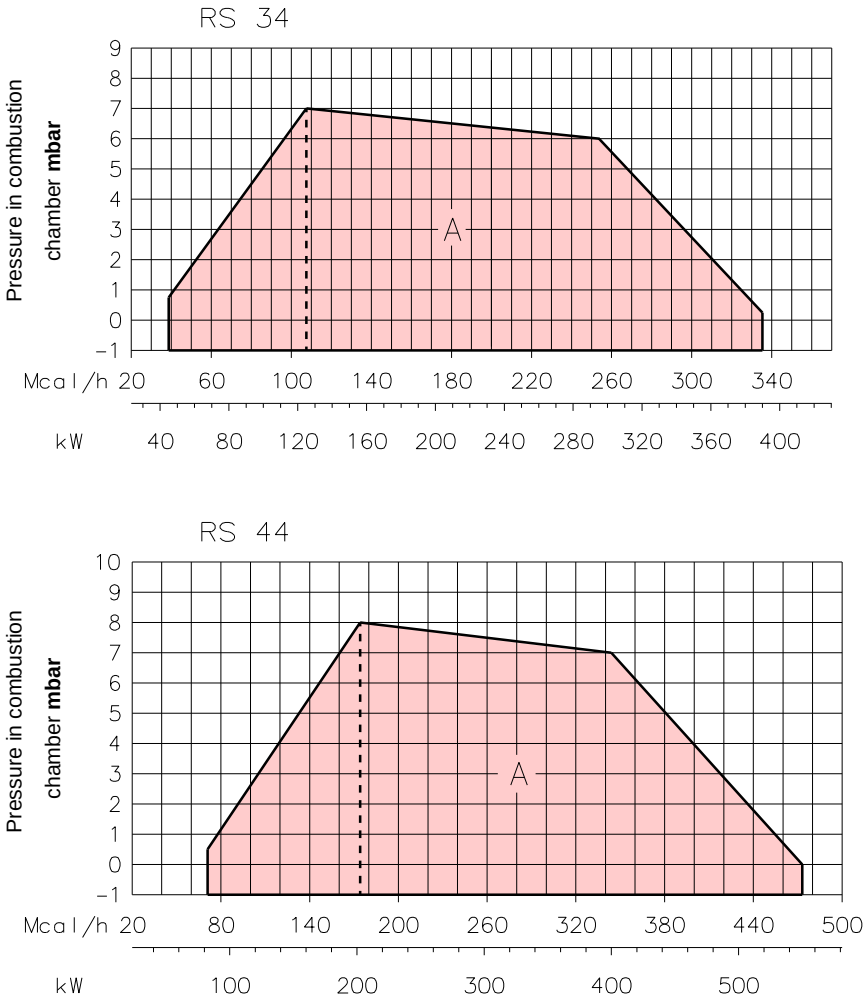

(A) D9304

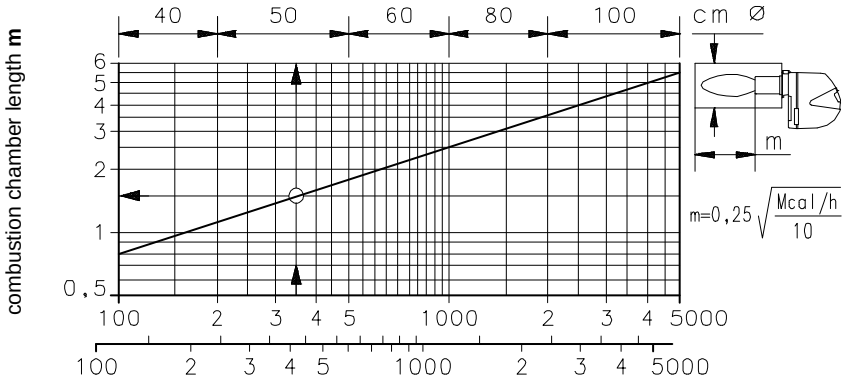

(B) D497

FIRING RATES (A)

During operation, burner output varies between:

- a **MAXIMUM OUTPUT**, selected within area A,
- and a **MINIMUM OUTPUT**, which must not be lower than the minimum limit in the diagram:

RS 34 MZ = 45 kW
RS 44 MZ = 80 kW

Attention

The FIRING RATE values have been obtained considering an ambient temperature of 20 °C, a barometric pressure of 1013 mbar (approx.0m above sea level) and with the combustion head adjusted as shown on page 8.

TEST BOILER (B)

The firing rates were set in relation to special test boilers, according to EN 676 regulations.
Figure (B) indicates the diameter and length of the test combustion chamber.

Example

Output 350 Mcal/h:
diameter = 50 cm; length = 1.5 m.

COMMERCIAL BOILERS

The burner/boiler combination does not pose any problems if the boiler is CE type-approved and its combustion chamber dimensions are similar to those indicated in diagram (B).
If the burner must be combined with a commercial boiler that has not been CE approved and/or its combustion chamber dimensions are clearly smaller than those indicated in diagram (B), consult the manufacturer.
In addition, for inversion boilers you are advised to check the length of the combustion head, as indicated by the boiler manufacturer.

RS 34 MZ

kW	1 Δp (mbar)	2 Δp (mbar)	3 Δp (mbar)				
			MB DLE 407 B01 S20	MB DLE 410 B01 S20	MB DLE 412 B01 S20	MB DLE 415 B01 S20	MB DLE 420 B01 S20
130	1.5	0.1	8.6	4.4	2.3	3.2	3.2
140	2.0	0.1	9.7	5.0	2.6	3.2	3.2
160	2.9	0.1	12.3	6.2	3.2	3.2	3.2
180	3.8	0.2	15.1	7.6	3.8	3.2	3.2
200	4.6	0.2	18.1	9.0	4.5	3.2	3.2
220	5.5	0.3	21.2	10.6	5.3	3.2	3.2
240	6.4	0.3	24.6	12.3	6.1	3.2	3.2
260	7.3	0.4	28.2	14.1	6.9	3.5	3.2
280	8.2	0.4	32.3	16.0	7.8	3.9	3.2
300	9.1	0.5	36.6	18.0	8.7	4.3	3.2
320	10.0	0.5	41.2	20.0	9.6	4.7	3.2
340	10.9	0.6	45.6	22.0	10.7	5.1	3.3
360	11.8	0.7	50.2	23.9	11.8	5.6	3.5
380	12.7	0.8	54.9	26.0	13.0	6.0	3.8
390	13.1	0.8	57.4	27.0	13.5	6.3	4.0

RS 44 MZ

kW	1 Δp (mbar)	2 Δp (mbar)	3 Δp (mbar)					
			MB DLE 407 B01 S20	MB DLE 407 B01 S52	MB DLE 410 B01 S20	MB DLE 412 B01 S20	MB DLE 415 B01 S20	MB DLE 420 B01 S20
200	3.0	0.2	18.1	18.1	9.0	4.5	3.2	3.2
225	4.0	0.3	22.1	22.1	11.0	5.5	3.2	3.2
250	4.9	0.3	26.4	26.4	13.2	6.5	3.3	3.2
275	5.9	0.4	31.3	31.3	15.5	7.6	3.8	3.2
300	6.9	0.5	36.6	36.6	18.0	8.7	4.3	3.2
325	7.9	0.6	42.2	42.2	20.5	9.9	4.8	3.2
350	8.9	0.6	47.8	47.8	22.9	11.2	5.4	3.4
375	9.8	0.7	53.7	53.7	25.4	12.7	5.9	3.8
400	10.8	0.8	-	59.9	28.1	14.0	6.5	4.1
425	11.8	1.0	-	66.4	30.8	15.4	7.1	4.5
450	12.8	1.1	-	73.2	33.6	16.8	7.7	4.9
475	13.8	1.2	-	80.3	36.5	18.3	8.3	5.3
500	14.7	1.3	-	87.6	39.5	19.8	9.0	5.7
525	15.7	1.5	-	95.1	42.6	21.4	9.6	6.1
550	16.7	1.6	-	103.0	45.8	23.1	10.2	6.6

(A)

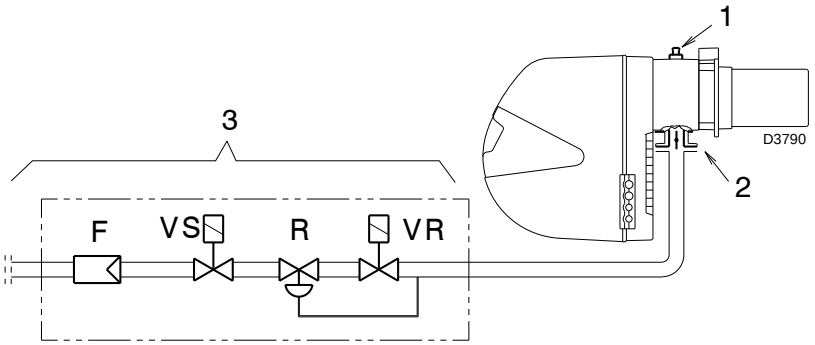

(B)

GAS PRESSURE

The adjacent tables show minimum pressure losses along the gas supply line depending on the maximum burner output operation.

Column 1
Pressure loss at combustion head.
Pressure of the gas at the socket 1)(B), with combustion chamber at 0 mbar.

Column 2
Pressure loss at gas butterfly valve 2)(B) with maximum opening: 90°.

Column 3
Pressure loss of gas train 3)(B) includes: adjustment valve VR, safety valve VS (both fully open), pressure governor R, filter F.

The values shown in the various tables refer to:
natural gas G 20 PCI 9.45 kWh/Sm^3
(8.2 Mcal/Sm^3)
With:
natural gas G 25 PCI 8.13 kWh/Sm^3
(7.0 Mcal/Sm^3)
multiply the values of the table:
- columns 1-2: by 1.5;
- column 3: by 1.35.

Calculate the approximate maximum output of the burner in this way:
- subtract the combustion chamber pressure from the gas pressure measured at test point 1)(B).
- Find, in the table relating to the burner concerned, the pressure value closest to the result of the subtraction.
- Read off the corresponding output on the left.

Example - RS 34 MZ:
- Maximum output operation
- Natural gas G 20 PCI 9.45 kWh/Sm^3
- Gas pressure at test point 1)(B) =9.3 mbar
- Pressure in combustion chamber = 2 mbar
  9.3 - 2 =7.3 mbar

A pressure of 7.3 mbar (column 1) corresponds in the table RS 34 MZ to an output of 260 kW.
This value serves as a rough guide, the effective delivery must be measured at the gas meter.

To calculate the required gas pressure at test point 1)(B), set the maximum output required from the burner operation:
- find the nearest output value in the table for the burner in question.
- Read off the pressure at test point 1)(B) on the right in column 1.
- Add this value to the estimated pressure in the combustion chamber.

Example - RS 34 MZ:
- Required burner maximum output operation: 260 kW
- Natural gas G 20 PCI 9.45 kWh/Sm^3
- Pressure of the gas at an output of 260 kW, from the table RS 34 MZ, column 1 =7.3 mbar
- Pressure in combustion chamber = 2 mbar
  7.3 + 2 =9.3 mbar
  pressure required at test point 1)(B).

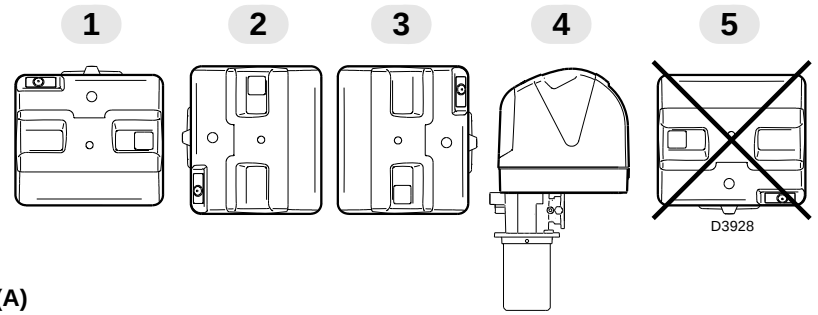

(A)

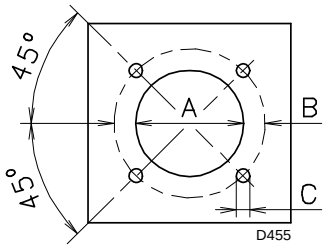

mm	A	B	C
RS 34 MZ	160	224	M 8
RS 44 MZ	160	224	M 8

(B)

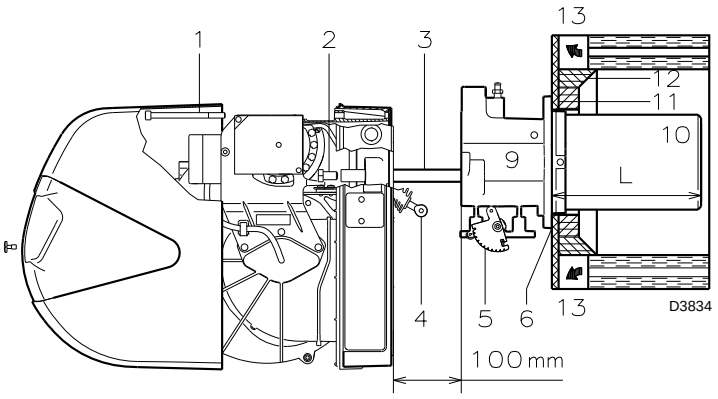

(C)

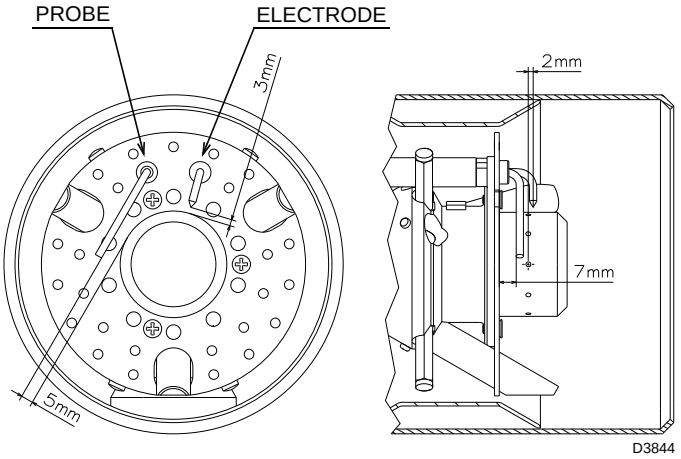

(D)

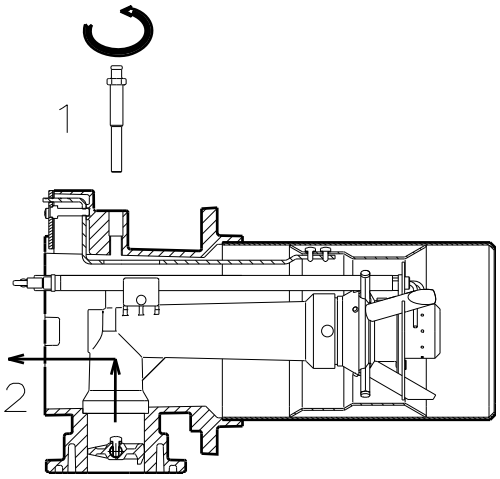

(E)

INSTALLATION

⚠ **THE BURNER MUST BE INSTALLED IN CONFORMITY WITH LEGISLATION AND LOCAL STANDARDS.**

OPERATION POSITION (A)

⚠ The burner is designed to operate only in the positions **1**, **2**, **3 and 4**.

Installation **1** is preferable, as it is the only one that allows the maintenance operations as described in this manual. Installations **2**, **3 and 4** allow the working, but make the operations of maintenance and checking of the combustion head more difficult.

⛔ Any other position could compromise the correct operation of the appliance. Installation **5** is forbidden, for safety reasons.

BOILER PLATE (B)

Pierce the closing plate of the combustion chamber, as in (B). The position of the threaded holes can be marked using the thermal insulation screen supplied with the burner.

BLAST TUBE LENGTH (C)

The length of the blast tube must be selected according to the indications provided by the manufacturer of the boiler, and in any case it must be greater than the thickness of the boiler door complete with its fettling.

The range of lengths available, L (mm), is as follows:

Blast tube 10)	RS 34 MZ	RS 44 MZ
• short	216	216
• long	351	351

For boilers with front flue gases 13) or flame inversion chambers, protective fettling in refractory material 11) must be inserted between the boiler fettling 12) and the blast tube 10).

This protective fettling must not compromise the extraction of the blast tube.

For boilers with a water-cooled frontpiece, a heat-resistant cover is not necessary 11)-12)(C), unless expressly requested from the boiler manufacturer.

FIXING THE BURNER TO THE BOILER (C)

Before fixing the burner to the boiler, check (from the opening of the blast tube) that the probe and the electrode are correctly positioned, as in (D).

Separate the combustion head from the rest of the burner, fig. (C):

- disengage the articulated coupling 4) from the graduated sector 5);
- remove the screws 2) from the two guides 3);
- remove screw 1) and pull the burner back on guides 3) by about 100 mm;
- disconnect the probe and electrode leads, then unthread the burner completely from the guides.

Fix the unit 9)(C) to the boiler plate, inserting the supplied insulating gasket 6)(C). Use the 4 screws, also supplied with the unit, after first protecting the thread with an anti-locking product. The seal between burner and boiler must be airtight.

If, in the previous check, the position of the probe or electrode was not correct, remove the screw 1)(E), extract the inner part 2)(E) of the head, and adjust them. Do not rotate the probe: leave it as in (D). If it is located too close to the ignition electrode the control box amplifier may be damaged.

⚠ **ATTENTION**
Proceed with the assembly of the inner part 2)(E) of the combustion head, tightening the screw 1)(E) with a tightening torque of **4 ÷ 6 Nm**.

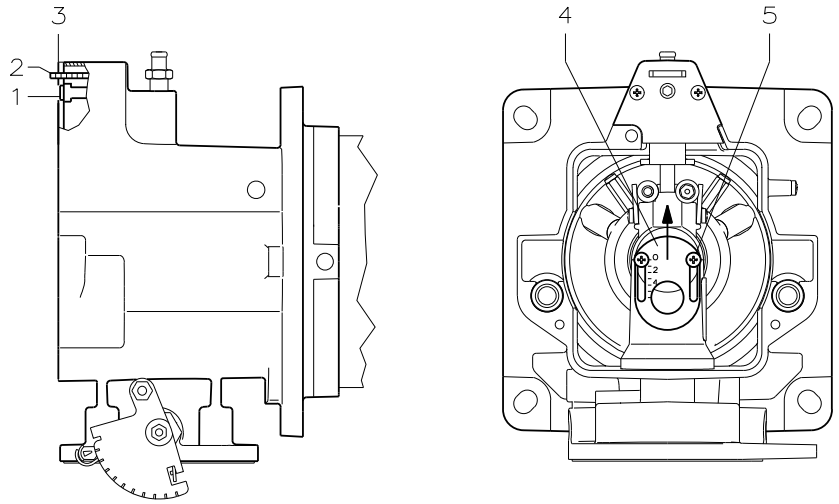

(A)

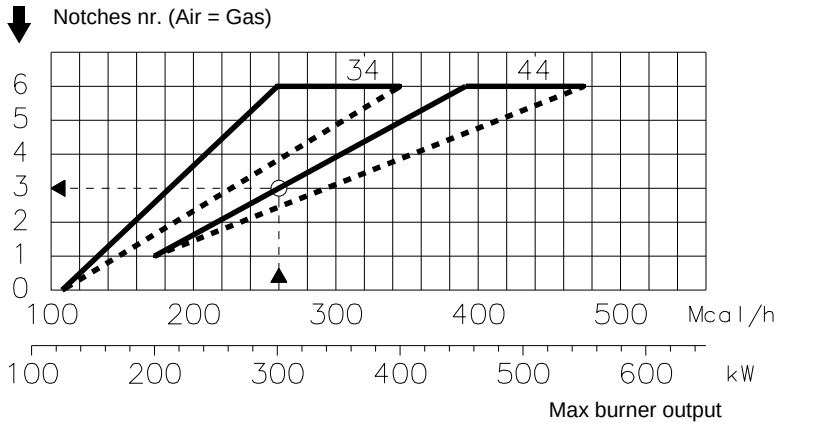

(B)

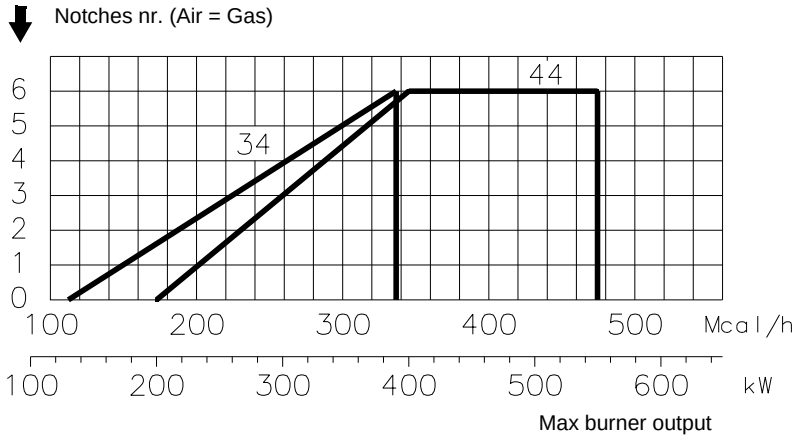

(C)

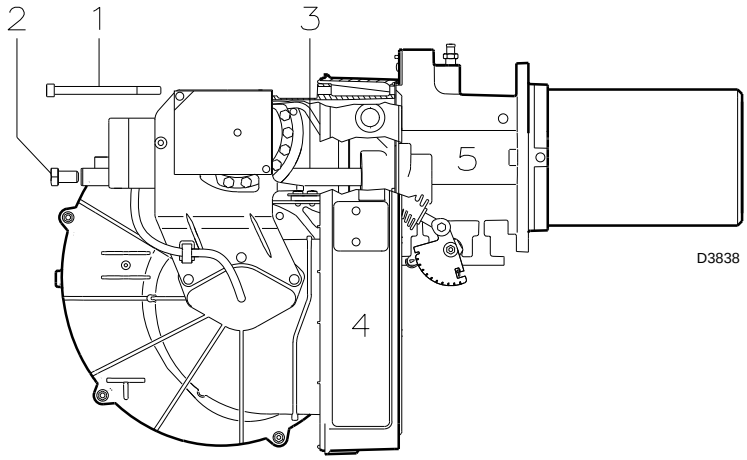

(D)

SETTING THE COMBUSTION HEAD

Installation operations are now at the stage where the blast tube and the pipe coupling are secured to the boiler as shown in fig.(A). It is therefore particularly easy to adjust the combustion head.

Air adjustment (A - B)

Rotate the screw 1)(A) until the notch on the lamina 2)(A) corresponds with the surface of the plate 3)(A).

Example:

RS 44 MZ burner, output = 300 kW.
From diagram (B) you can see that, for the MAX output of 300 kW, the air should be adjusted at notch 3, subtracted from the value of the pressure in the chamber. In this case, the loss of pressure in the combustion head is shown in column 1 on page 6.

Note

If the pressure in the chamber is equal to 0 mbar, the air is adjusted with reference to the broken line of the diagram (B).

Central air adjustment (A - C)

n case the application needs a particular setup, it is possible to modify the central air delivery using the ring nut 4)(A) up to the notch indicated in diagram (C).
In order to carry out this operation, unscrew the screws 5)(A) and lift up the ring nut 4)(A). At the end, tighten the screws 5)(A) again.

Once you have finished adjusting the head, reassemble the burner 4)(D) on the guides 3)(D) at about 100mm from the pipe coupling 5)(D) - burner in the position shown in fig. (C)p. 7 - insert the cable of the probe and the cable of the electrode, then slide the burner as far as the pipe coupling, burner in the position shown in fig. (D).
Refit screws 2) on guides 3).
Fix the burner to the pipe coupling with the screw 1).

Attention

When fitting the burner on the two guides, it is advisable to gently draw out the high voltage cable and flame detection probe cable until they are slightly stretched.

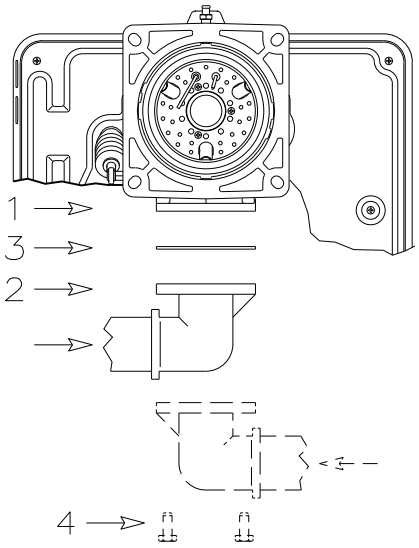

(A) D3839

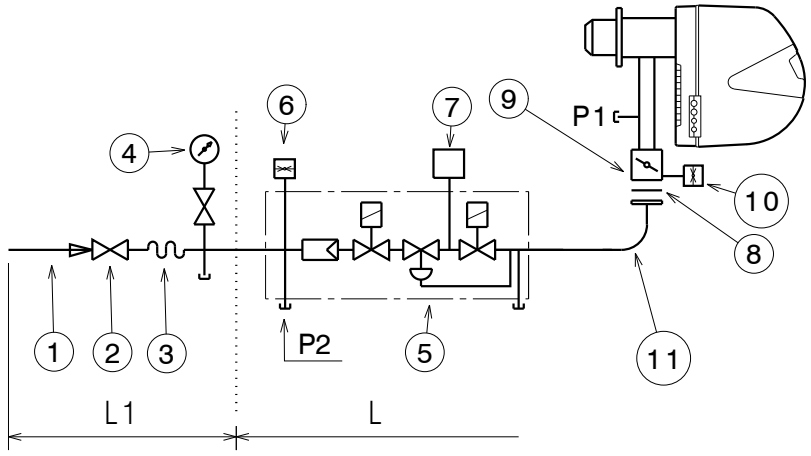

(B) D3791

BURNERS AND RELATIVE GAS TRAINS APPROVED ACCORDING TO REGULATION EN 676

GAS TRAINS L				BURNER		7	11
Code	Model	Ø	C.T.	RS 34 MZ	RS 44 MZ	Code	Code
3970599	MB DLE 407 B01 S52	3/4”	-	-	●	-	3000824
3970553 3970229*	MB DLE 407 B01 S20	3/4”	-	●	●	3010123	3000824
3970554 3970230*	MB DLE 410 B01 S20	1”	-	●	●	3010123	3000824
3970144 3970231*	MB DLE 412 B01 S20	1”1/4	-	●	●	3010123	-
3970180 3970232*	MB DLE 415 B01 S20	1”1/2	-	●	●	3010123	-
3970181 3970233* 3970182 3970234*	MB DLE 420 B01 S20	2”	- - ♦ ♦	●	●	3010123 3010123 - -	3000822

*** Trains complete with 6-pin plug for connection to burner.**

(C)

GAS FEEDING LINE

- The gas train must be connected to the gas attachment 1)(A), using flange 2), gasket 3) and screws 4) supplied with the burner.
- The gas train can enter the burner from the right or left side, depending on which is the most convenient, see fig.(A).
- The gas solenoids must be as close as possible to the burner, to ensure that the gas reaches the combustion head within the safety time of 3s.

GAS TRAIN (B)

Approved, together with the burner, according to the regulation EN 676, and supplied separately from the burner, with the code indicated in the table (C).

KEY TO LAYOUT(B)

1 - Gas input pipe
2 - Manual valve
3 - Vibration damping joint
4 - Pressure gauge with pushbutton cock
5 - Multibloc, including:
  - filter (replaceable)
  - operation valve
  - pressure adjuster
6 - Minimum gas pressure switch
7 - Valve seal checking device.
  In accordance with EN 676 Standards, gas valve leak detection control devices are compulsory for burners with maximum outputs of more than 1200 kW.
8 - Gasket
9 - Gas adjustment butterfly valve
10 - Max gas pressure switch (accessory)
11 - Gas train/burner adaptor

P1 - Pressure at combustion head
P2 - Up-line pressure of valves/adjuster

L - Gas train supplied separately with the code indicated in table (C)
L1 - The responsibility of the installer

KEY TO TABLE (C)

C.T.= Checking device for gas valves seal:
- = Gas train without gas valve leak detection control device; device that can be ordered separately and assembled subsequently (see Column 7).
♦= Gas train with assembled VPS valve leak detection control device.

7 = VPS valve leak detection control device. Supplied separately from gas train on request.
11 = Gas train/burner adaptor. Supplied separately from gas train on request.

Note

See the accompanying instructions for the adjustment of the gas train.

MIN GAS PRESSURE SWITCH

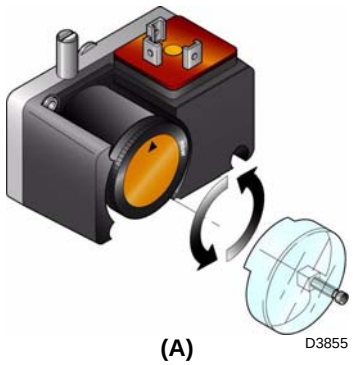

(A) D3855

AIR PRESSURE SWITCH

(B) D3854

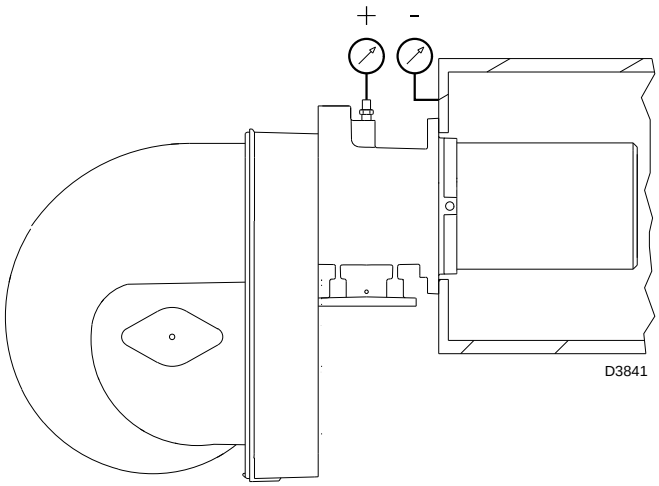

(C)

SERVOMOTOR

(D)

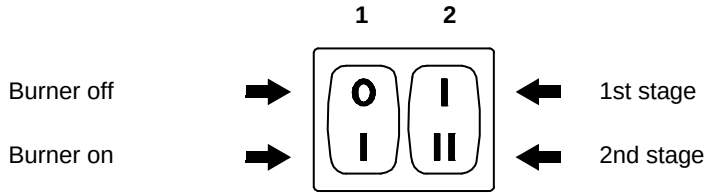

(E) D469

ADJUSTMENTS PRIOR TO FIRING

ATTENTION

THE FIRST FIRING MUST BE CARRIED OUT BY QUALIFIED PERSONNEL WITH THE RIGHT INSTRUMENTS.

The adjustment of the combustion head, air, was described on page 9.
In addition, the following adjustments must also be made:

- open manual valves up-line from the gas train.
- Adjust the minimum gas pressure switch to the start of the scale (A).
- Adjust the air pressure switch to the zero position of the scale (B).
- Purge the air from the gas line.
  Continue to purge the air (we recommend using a plastic tube routed outside the building) until gas is smelt.
- Assemble a pressure gauge (C) on the gas pressure socket of the pipe coupling.
  The manometer readings are used to calculate MAX. burner power using the tables on page 6.
- Connect two lamps or testers to the two gas line solenoid valves VR and VS to check the exact moment at which voltage is supplied.
  This operation is unnecessary if each of the two solenoid valves is equipped with a pilot light that signals voltage passing through.

Before starting up the burner it is good practice to adjust the gas train so that firing takes place in conditions of maximum safety, i.e. with gas delivery at the minimum.

SERVOMOTOR (D)

The servomotor provides simultaneous adjustment of the air gate valve, by means of the variable profile cam, and the gas butterfly valve.
The angle of rotation of the servomotor is equal to the angle on the graduated sector controlling the gas butterfly valve. The servomotor rotates through 90 degrees in 12 seconds.
Do not alter the factory setting for the 4 cams; simply check that they are set as indicated below:

Cam St2 : 90°
Limits rotation toward maximum position. When the burner is in 2nd stage operation the gas butterfly valve must be fully open: 90°.
Cam St0 : 0°
Limits rotation toward the minimum position. When the burner is shut down the air gate valve and the gas butterfly valve must be closed: 0°.
Cam St1 : 15°
Adjusts the ignition position and the output in 1st stage operation.
Cam MV
Not used.

BURNER START-UP

Close the remote controls and set:

- switch 1)(E) to "Burner ON" position
- switch 2)(E) to "1st STAGE" position.

As soon as the burner starts check the direction of rotation of the fan blade, looking through the flame inspection window 17)(A)p.4.
Make sure that the lamps or testers connected to the solenoids, or pilot lights on the solenoids themselves, indicate that no voltage is present. If voltage is present, then **immediately** stop the burner and check electrical connections.

BURNER FIRING

Having completed the checks indicated in the previous heading, the burner should ignite. If the motor starts but the flame does not appear and the control box goes into lockout, reset and wait for a new firing attempt. If firing is still not achieved, it may be that gas is not reaching the combustion head within the safety time period of 3 seconds. In this case increase gas delivery during firing. The arrival of gas at the pipe coupling is indicated by the U-type manometer (C). Once the burner has fired, now proceed with global calibration operations.

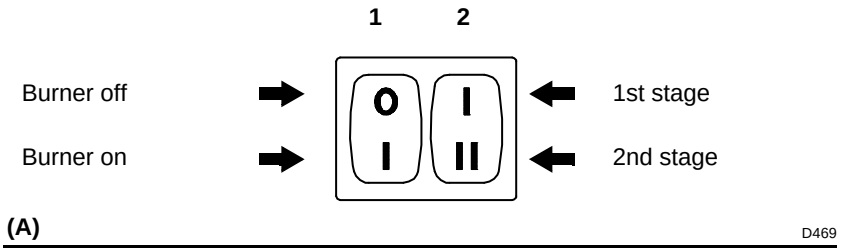

BURNER CALIBRATION

The optimum calibration of the burner requires an analysis of the flue gases at the boiler outlet.

Adjust successively:
1 - 2nd stage burner output
2 - 1st stage burner output
3 - Intermediate outputs
4 - Air pressure switch
5 - Minimum gas pressure switch

DETERMINATION OF OUTPUT UPON FIRING (MINIMUM)

According to EN 676 Regulation

Burners with max. output up to 120 kW

Firing can be performed at the maximum operation output level. Example:

- max. operation output : 120 kW
- max. firing output : 120 kW

Burners with max. output above 120 kW

Firing must be performed at a lower output than the max. operation output.
If the firing output does not exceed 120 kW, no calculations are required. If firing output exceeds 120 kW, the regulation prescribes that the value be defined according to the control box safety time "ts":
for "ts" = 3s, firing output must be equal to, or lower than, 1/3 of max. operation output.

Example
MAX operation output of 450 kW.
The firing output must be equal to, or less than, 150 kW with ts = 3s

In order to measure the firing output:
- disconnect the plug-socket 24)(A)p.4 on the ionisation probe cable (the burner will fire and then go into lockout after the safety time has elapsed).
- Perform 10 firings with consecutive lockouts.
- Read the quantity of gas burned on the meter. This quantity must be equal to, or lower than, the quantity given by the formula, for ts = 3s:

$$Vg = \frac{\mathbf{Qa}\ \text{(max. burner output)}\ \mathbf{x\ n\ x\ ts}}{\mathbf{3600}}$$

Vg: volume supplied upon firings carried out (Sm^3)
Qa: firing output (Sm^3/h)
n: number of firings (10)
ts: safety time (sec)

Example for gas G 20 (9.45 kWh/Sm^3):
firing output 150 kW
corresponding to 15.87 Sm^3/h.
After 10 firings with lockout, the output indicated on the meter must be equal to, or less than:

$$Vg = \frac{\mathbf{15.87\ x\ 10\ x\ 3}}{\mathbf{3600}} = \mathbf{0.132\ Sm^3}$$

1 - 2ND STAGE BURNER OUTPUT

2nd stage output of the burner must be set within the firing rate range shown on page 5.
In the above instructions we left the burner running in 1st stage operation. Now set switch 2)(A) to the 2nd stage position: the servomotor will open, simultaneously, the air damper and the gas butterfly valve to 90°.
Adjustment of gas delivery
Measure the delivery of gas from the gas meter. A guideline indication can be calculated from the tables on page 6, simply read off the gas pressure on the manometer, see fig.(C) on page 10, and follow the instructions on page 6.
- If delivery needs to be reduced, diminish outlet gas pressure and, if it is already very low, slightly close adjustment valve VR.
- If delivery needs to be increased, increase outlet gas pressure.

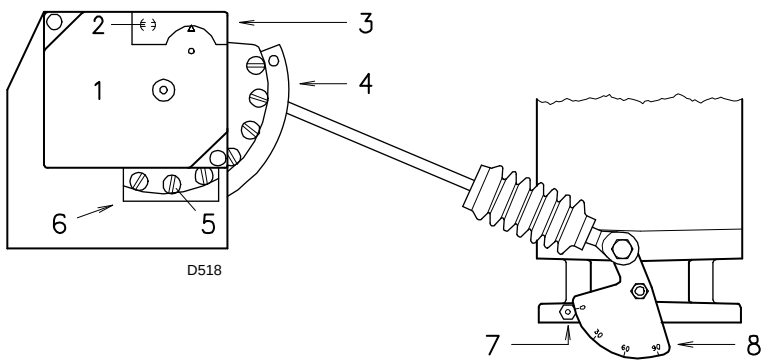

1 Servomotor

2 Cam 4 engaged/ disengages

3 Cam cover

4 Adjustable profile cam

5 Cam profile adjustment screws

6 Opening for access to screws 5

7 Index for graduated sector 8

8 Graduated sector for gas butterfly valve

(A)

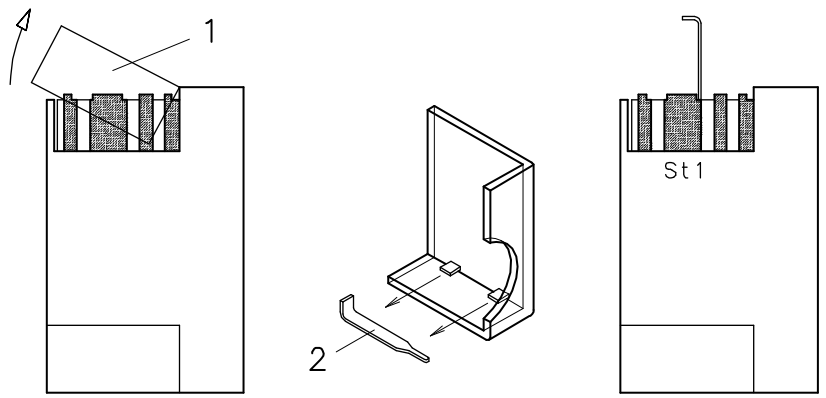

(B)

D520

Adjusting air delivery

Progressively adjust the end profile of cam 4)(A) by turning the cam adjustment screws as they appear through the access opening 6)(A).

- Lock the screws to increase air delivery.
- Loose the screws to reduce air delivery.

2 - 1ST STAGE BURNER OUTPUT

Burner power in 1st stage operation must be selected within the firing rate range shown on page 5.

Set the switch 2)(A)p.11 to the 1st stage position: the servomotor 1)(A) will close the air damper and, at the same time, closes the gas butterfly valve down to 15°, i.e. down to the original factory setting.

Adjustment of gas delivery

Measure the delivery of gas from the gas meter.

- If this value is to be reduced, decrease the angle of cam St1 (B) slightly by proceeding a little at a time until the angle is changed from 15° to 13° or 11°....
- If it is necessary to increase it, move to 2nd stage operation by altering the setting of switch 2)(A)p.11 and increase the angle of cam St1, proceeding a little at a time until the angle is changed from 15° to 17° - 19°....
  At this point return to 1st stage operation and measure gas delivery.

NOTE

The servomotor follows the adjustment of cam St1 only when the angle is reduced. If, however the angle must be increased, switch to 2nd stage operation, increase the angle and then return to 1st stage operation to check the effect of the adjustment.

If you increase the angle of St1 while the burner is operating in 1st stage, lockout will result.

In order to adjust cam St1, remove press-fit cover 1), as shown in fig.(B), extract the relevant key 2) from inside, and fit it into the keyway in cam St1.

Adjustment of air delivery

Progressively adjust the starting profile of cam 4)(A) by turning the screws working through the access hole 6)(A). It is preferable not to turn the first screw since this is used to set the air damper to its fully-closed position.

3 - INTERMEDIATE OUTPUTS

Adjustment of gas delivery

No adjustment of gas delivery is required.

Adjustment of air delivery

Switch off the burner using switch 1)(A)p.11, disengage the variable profile cam, set the servomotor shaft slot 2)(A) to a vertical position and turn the central screws of the cam so that the cam offers a progressive gradient. Try turning the cam back and forth by hand a few times until the movement is completely smooth with no signs of sticking.

Do not alter the position of the screws at each end of the cam track, which have already been adjusted for 1st and 2nd stage air damper control.

NOTE

Once you have finished adjusting 2nd stage - 1st stage - intermediate outputs, check firing once again: noise emission at this stage must be identical to the following stage of operation. If you notice any sign of pulsation, reduce the firing stage delivery.

AIR PRESSURE SWITCH

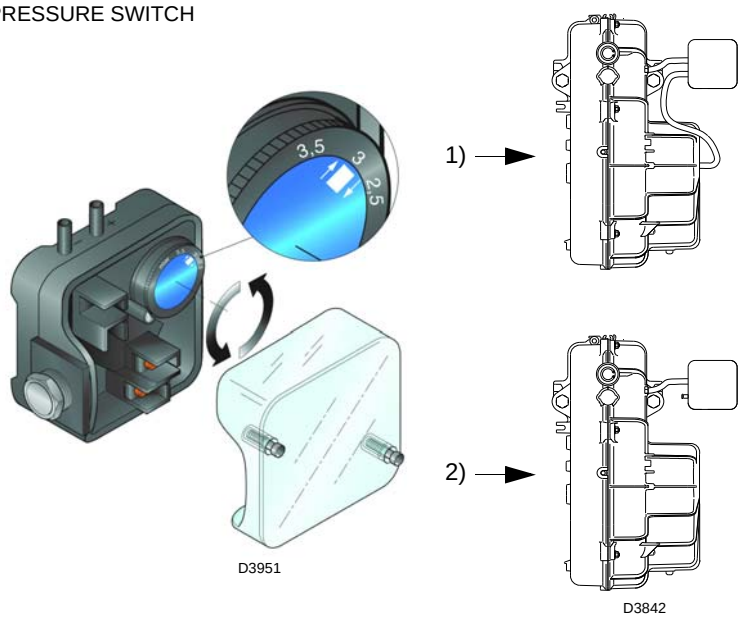

(A)

MINIMUM GAS PRESSURE SWITCH

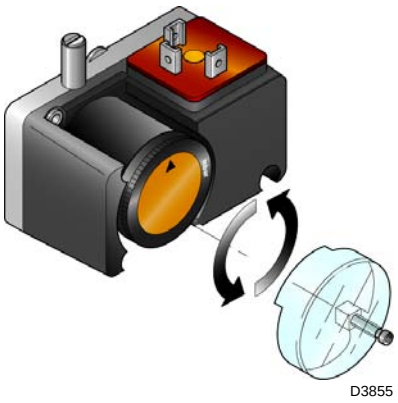

(B)

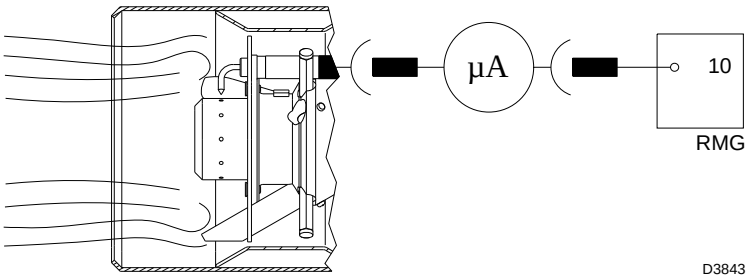

(C)

4 - AIR PRESSURE SWITCH (A)

Adjust the air pressure switch after having performed all other burner adjustments with the air pressure switch set to the start of the scale (A).
With the burner operating in 1st stage, increase adjustment pressure by slowly turning the relative knob clockwise until the burner locks out.
Then turn the knob anticlockwise by about 20% of the set point and repeat burner starting to ensure it is correct.
If the burner locks out again, turn the knob anticlockwise a little bit more.

Attention: As a rule, the air pressure switch must limit the CO in the fumes to less than 1% (10,000 ppm).
To check this, insert a combustion analyser into the chimney, slowly close the fan suction inlet (for example with cardboard) and check that the burner locks out, before the CO in the fumes exceeds 1%.

The air pressure switch may operate in "differential" operation if connected to two pipes. If a negative pressure in the combustion chamber during pre-purging prevents the air pressure switch from switching, switching may be obtained by fitting a second pipe between the air pressure switch and the suction inlet of the fan. In such a manner the air pressure switch operates as differential pressure switch.

Attention: The use of the air pressure switch with differential operation is allowed only in industrial applications and where rules enable the air pressure switch to control only fan operation without any reference to CO limit.

5 - MINIMUM GAS PRESSURE SWITCH (B)

Adjust the minimum gas pressure switch after having performed all the other burner adjustments with the pressure switch set at the start of the scale (B).
With the burner operating in 2nd stage, increase adjustment pressure by slowly turning the relative knob clockwise until the burner locks out.
Then turn the knob anticlockwise by 2 mbar and repeat burner starting to ensure it is uniform.
If the burner locks out again, turn the knob anticlockwise again by 1 mbar.

FLAME PRESENT CHECK (C)

The burner is fitted with an ionisation system which ensures that a flame is present. The minimum current for control box operation is 6 μA. The burner provides a much higher current, so that controls are not normally required. However, if it is necessary to measure the ionisation current, disconnect the plug-socket 24)(A)p.4 on the ionisation probe cable and insert a direct current microammeter with a base scale of 100 μA. Carefully check polarities!

NORMAL FIRING
(n° = seconds from instant 0)

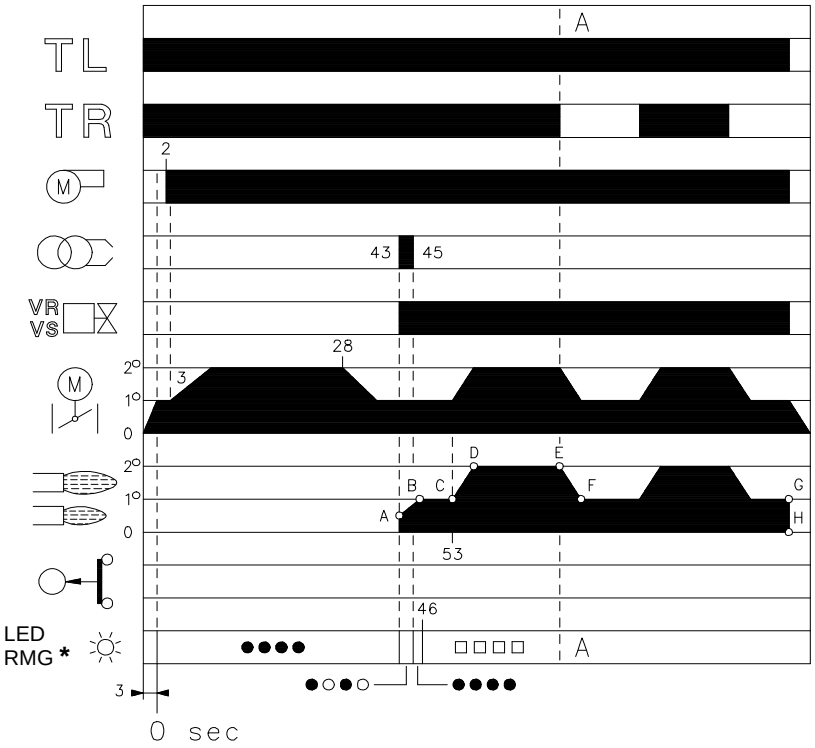

* ○ Off ● Yellow □ Green ▲ Red
For further details see page 17.

(A) D3028

NO FIRING

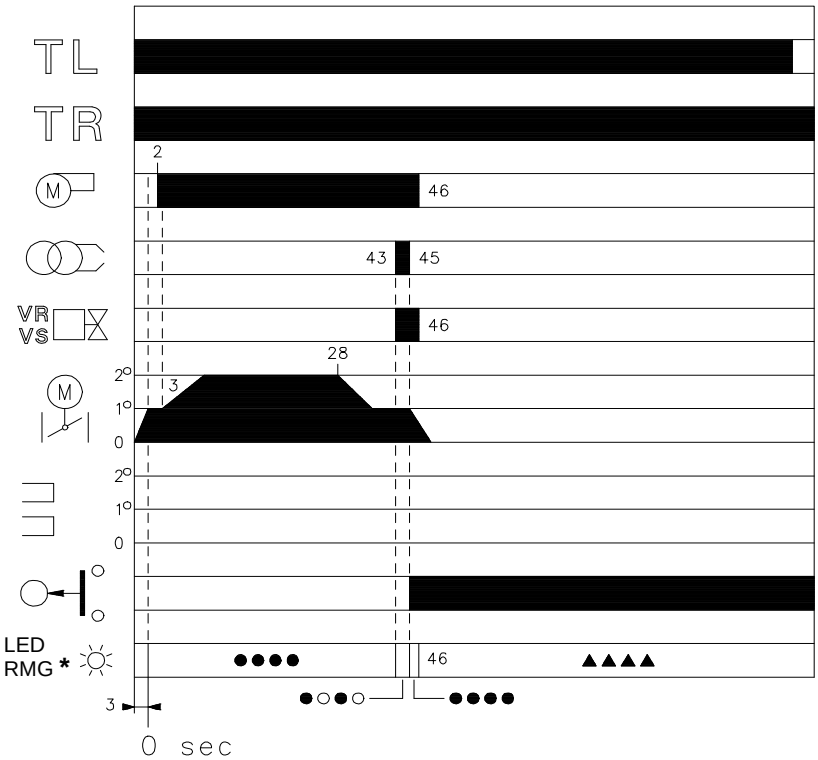

* ○ Off ● Yellow ▲ Red
For further details see page 17.

(B) D3029

BURNER OPERATION

BURNER START UP (A)

- : Remote control TL closes.
  Servomotor starts: it rotates during opening up to the angle set on cam St1.
  After about 3s:
- 0 s : The control box starting cycle begins.
- 2 s : Fan motor starts.
- 3 s : Servomotor starts: it rotates during opening until contact on cam St2 is tripped.
  The air damper is positioned to 2nd stage output.
  Pre-purge stage with air delivery at 2nd stage output.
  Duration 25 seconds.
- 28 s : Servomotor starts: it rotates during closing up to the angle set on cam St1.
- 43 s : The air damper and the gas butterfly are positioned to 1st stage output.
  Ignition electrode strikes a spark.
  Safety valve VS and adjustment valve VR (rapid opening) open. The flame is ignited at a low output level, point A. Output is then progressively increased, with the valve opening slowly up to 1st stage output, point B.
- 45 s : The spark goes out.
- 53 s : If remote control device TR is closed or if it has been replaced by a bridge, the servomotor will continue to turn until the cam St2 come into operation, setting the air damper and the gas butterfly valve to the 2nd stage operation position, section C-D.
  The control box starting cycle ends.

STEADY STATE OPERATION (A)

System equipped with one remote control TR
Once the starting cycle has come to an end, control of the servomotor passes on to the remote control TR that controls boiler temperature or pressure, point D.
(The control box will continue, however, to monitor flame presence and the correct position of the air pressure switch).

- When the temperature or the pressure increases until the control device TR opens, the servomotor closes the gas butterfly valve and the air damper and the burner passes from the 2nd to the 1st stage of operation, section E-F.
- When the temperature or pressure decreases until the control device TR closes, the servomotor opens the gas butterfly valve and the air damper and the burner passes from the 1st to the 2nd stage of operation. The sequence repeats endlessly.
- The stopping of the burner occurs when the heat requirement is lower than that supplied by the burner in the 1st stage , tract G - H. The TL remote control opens, the servomotor returns to angle 0° limited by cam St0. The air damper closes completely to reduce heat losses to a minimum.

Systems not equipped with TR (bridge installed)
The burner is fired as described in the case above. If the temperature or pressure increase until control device TL opens, the burner shuts down (Section A-A in the diagram).

FIRING FAILURE (B)

If the burner does not fire, it goes into lockout within 3 s of the opening of the gas solenoid valve and 49 s after the closing of remote control TL. The control box red pilot light will light up.

BURNER FLAME GOES OUT DURING OPERATION

If the flame should accidentally go out during operation, the burner will lock out within 1s.

FINAL CHECKS (with the burner working):

- disconnect a wire of the minimum gas pressure switch;
- switch on the thermostat/pressure switch TL;
- switch on the thermostat/pressure switch TS;

the burner must stop.

- disconnect the air adduction tube of the pressure switch;
- disconnect the wire of the ionisation probe;

the burner must stop in lockout.

Make sure that the mechanical locking systems on the various adjustment devices are fully tightened.

MAINTENANCE

⚠ The burner requires periodic maintenance carried out by a qualified and authorised technician **in conformity with legislation and local standards**.

⚠ Periodic maintenance is essential for the reliability of the burner, avoiding the excessive consumption of fuel and consequent pollution.

⚠ Before carrying out any cleaning or control, always switch off the electrical supply to the burner, using the main switch of the system.

Combustion

The optimum calibration of the burner requires an analysis of the flue gases. Significant differences with respect to the previous measurements indicate the points where more care should be exercised during maintenance.

Gas leaks

Make sure that there are no gas leaks on the pipework between the gas meter and the burner.

Gas filter

Substitute the gas filter when dirty (see train instructions).

Combustion head

Open the burner and make sure that all components of the combustion head are in good condition, not deformed by the high temperatures, free of impurities from the surroundings and correctly positioned. If in doubt, disassemble the elbow.

Servomotor

Release the cam 4)(A)p.12, rotating by 90° the notch 2)(A)p.12, and manually check that it rotates smoothly backwards and forwards. Constrain the cam again 4).

Burner

Check for excess wear or loose screws in the mechanisms controlling the air damper and the gas butterfly valve. In addition, the screws that fix the cables in the terminal board must be blocked, along with the burner sockets.

Clean the outside of the burner, taking special care with the transmission joints and cam 4)(A)p.12.

Combustion

Adjust the burner if the combustion values found at the beginning of the operation do not comply with the regulations in force, or at any rate, do not correspond to good combustion.

Use the appropriate card to record the new combustion values; they will be useful for subsequent controls.

OPENING THE BURNER

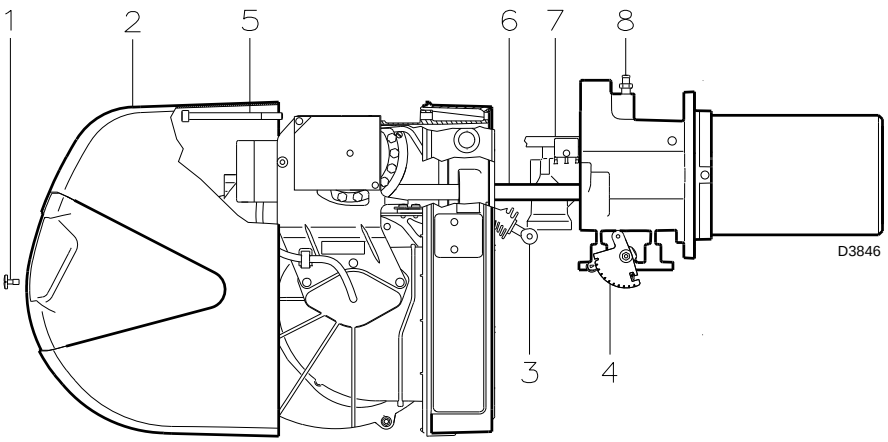

(A)

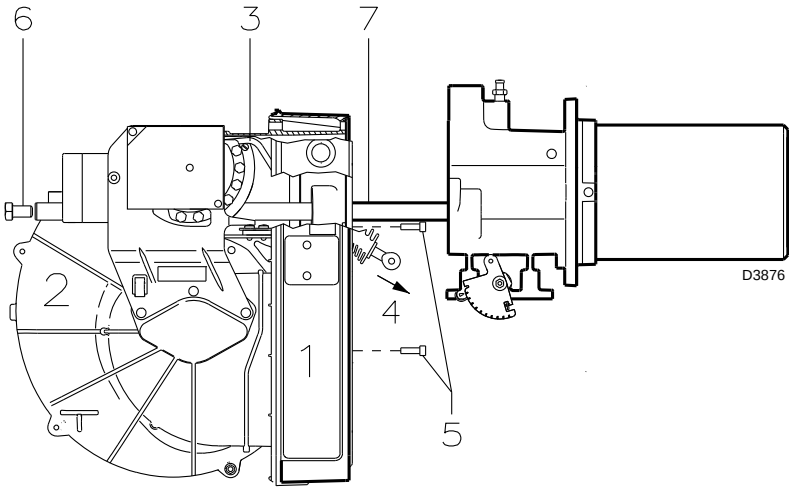

(B)

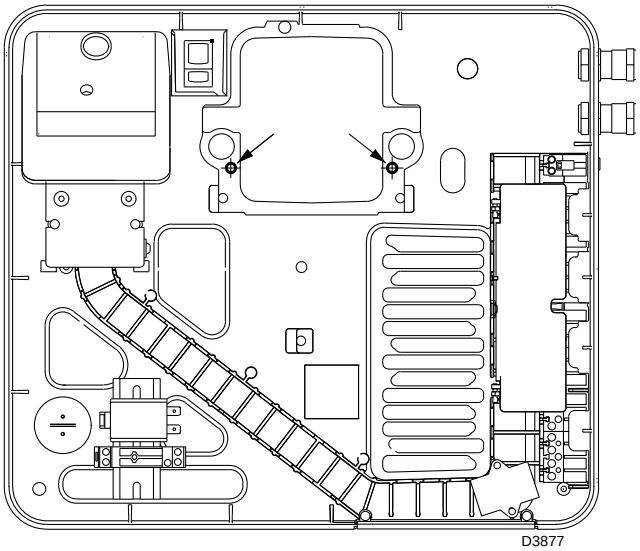

(C)

TO OPEN THE BURNER (A):

- Switch off the electrical power.
- Remove screw 1) and withdraw casing 2).
- Disengage the articulated coupling 3) from the graduated sector 4).
- Remove screw 5) only if the models have a long head, retract the burner on guides 6) for around 100 mm. Remove the probe cables and then retract the whole burner.

Now extract the gas distributor 7) after having removed the screw 8).
Remove the screws 2)(C)p. 7 and tighten the two extensions 25)(A)p.4 supplied with the burner.
Retighten the two screws 2)(C)p.7 on the terminal of the extensions.

> ⚠ **ATTENTION**
> Proceed with the assembly of the inner part of the combustion head, tightening the screw 8)(A) with a tightening torque of **4 ÷ 6 Nm**.

TO CLOSE THE BURNER (A):

- Push the burner up to approximately 100mm from the pipe coupling.
- Reconnect the leads and slide in the burner until it comes to a stop.
- Replace the screw 5) and carefully pull the probe and electrode cables outwards until they are slightly taut.
- Re-couple the articulated coupling 3) to the graduated sector 4).
- In the long head models, unscrew the extensions and reposition them in the appropriate space; tighten the screws to the guides 2)(C)p.7.
- Reposition the casing 2) and lock with the screw 1).

SWITCHBOARD MAINTENANCE

If it is necessary to carry out maintenance on the switchboard 1)(B), it is possible to remove only the fan unit 2)(B), to allow improved access to the electrical components.
With the burner open as in fig.(A), unhook the tie-rod 3)(B), removing the screw on the variable profile cam, and extract it from the tip 4)(B).
At this point, disconnect the cables relating to the air pressure switch, the servomotor and fan motor.
Remove the 3 screws 5)(B) positioned on the protective cover.
Removing the 2 screws 6)(B), it is possible to unthread the fan unit 2)(B) from the guides 7)(B).
Finally, you can use 2 of the 3 screws 5)(B) to fasten the electrical switchboard to the pipe coupling, in the points indicated in fig.(C), and then carry out the maintenance operations.

BURNER START-UP CYCLE DIAGNOSTICS

During start-up, indication is according to the following table:

COLOUR CODE TABLE	
Sequences	**Colour code**
Pre-purging	●●●●●●●●●
Firing phase	●○●○●○●○●
Operation, flame ok	□□□□□□□□□
Operating with weak flame signal	□○□○□○□○□
Electrical supply lower than ~ 170V	●▲●▲●▲●▲●
Lockout	▲▲▲▲▲▲▲▲▲
Extraneous light	▲□▲□▲□▲□▲
Key to layout: ○ Off ● Yellow □ Green ▲ Red	

RESETTING THE CONTROL BOX AND USING DIAGNOSTICS

The control box features a diagnostics function through which any causes of malfunctioning are easily identified (indicator: **RED LED**).
To use this function, you must wait at least 10 seconds once it has entered the safety condition (**lockout**), and then press the reset button.
The control box generates a sequence of pulses (1 second apart), which is repeated at constant 3-second intervals.
Once you have seen how many times the light pulses and identified the possible cause, the system must be reset by holding the button down for between 1 and 3 seconds.

RED LED on wait at least 10s	Lockout	Press reset for > 3s	Pulses	Interval 3s	Pulses
			● ● ● ● ●		● ● ● ● ●

The methods that can be used to reset the control box and use diagnostics are given below.

RESETTING THE CONTROL BOX

To reset the control box, proceed as follows:

- Hold the button down for between 1 and 3 seconds.
  The burner restarts after a 2-second pause once the button is released.
  If the burner does not restart, you must make sure the limit thermostat is closed.

VISUAL DIAGNOSTICS

Indicates the type of burner malfunction causing lockout.
To view diagnostics, proceed as follows:

- Hold the button down for more than 3 seconds once the red LED (burner lockout) remains steadily lit.
  A yellow light pulses to tell you the operation is done.
  Release the button once the light pulses. The number of times it pulses tells you the cause of the malfunction, according to the coding system indicated in the table on page 18.

SOFTWARE DIAGNOSTICS

Reports burner life by means of an optical link with the PC, indicating hours of operation, number and type of lockouts, serial number of control box etc ...
To view diagnostics, proceed as follows:

- Hold the button down for more than 3 seconds once the red LED (burner lockout) remains steadily lit.
  A yellow light pulses to tell you the operation is done.
  Release the button for 1 second and then press again for over 3 seconds until the yellow light pulses again.
  Once the button is released, the red LED will flash intermittently with a higher frequency: only now can the optical link be activated.

Once the operations are done, the control box's initial state must be restored using the resetting procedure described above.

BUTTON PRESSED FOR	CONTROL BOX STATUS
Between 1 and 3 seconds	Control box reset without viewing visual diagnostics.
More than 3 seconds	Visual diagnostics of lockout condition: (LED pulses at 1-second intervals).
More than 3 seconds starting from the visual diagnostics condition	Software diagnostics by means of optical interface and PC (hours of operation, malfunctions etc. can be viewed)

The sequence of pulses issued by the control box identifies the possible types of malfunction, which are listed in the table on page 18.

Signal	Problem	Possible cause	Recommended remedy
2 blinks ● ●	Once the pre-purging phase and safety time have passed, the burner goes into lockout without the appearance of the flame	1 - The operation solenoid lets little gas through	Increase
		2 - One of the two solenoid valves does not open	Replace
		3 - Gas pressure too low	Increase pressure at governor
		4 - Ignition electrode incorrectly adjusted	Adjust
		5 - Electrode grounded due to broken insulation	Replace
		6 - High voltage cable defective	Replace
		7 - High voltage cable deformed by high temperature	Replace and protect
		8 - Ignition transformer defective	Replace
		9 - Incorrect valve or transformer electrical wiring	Check
		10 - Defective control box	Replace
		11 - A closed valve upline the gas train	Open
		12 - Air in pipework	Bleed air
		13 - Gas valves unconnected or with interrupted coil	Check connections or replace coil
3 blinks ● ● ●	The burner does not switch on, and the lockout appears	14 - Air pressure switch in operating position	Adjust or replace
	The burner switches on, but then stops in lockout	- Air pressure switch inoperative due to insufficient air pressure:	
		15 - Air pressure switch incorrectly adjusted	Adjust or replace
		16 - Pressure switch pressure test point pipe blocked	Clean
		17 - Poorly adjusted head	Adjust
		18 - High pressure in the furnace	Connect air pressure switch to fan suction line
	Lockout during pre-purging phase	19 - Defective motor control contactor (only three-phase version)	Replace
		20 - Defective electrical motor	Replace
		21 - Motor lockout (defective electrical motor)	Replace
4 pulses ● ● ● ●	The burner switches on, but then stops in lockout	22 - Flame simulation	Replace the control box
	Lockout when burner stops	23 - Permanent flame in the combustion head or flame simulation	Eliminate persistence of flame or replace control box
6 blinks ● ● ● ● ● ●	The burner switches on, but then stops in lockout	24 - Defective or incorrectly adjusted servomotor	Adjust or replace
7 blinks ● ● ● ● ● ● ●	The burner goes into lockout immediately following the appearance of the flame	25 - The operation solenoid lets little gas through	Increase
		26 - Ionisation probe incorrectly adjusted	Adjust
		27 - Insufficient ionisation (less than 5 A)	Check probe position
		28 - Earth probe	Withdraw or replace cable
		29 - Burner poorly grounded	Check grounding
		30 - Phase and neutral connections inverted	Invert them
		31 - Defective flame detection circuit	Replace the control box
	Burner lockout moving between 1st and 2nd stages, or between 2nd and 1st stages	32 - Too much air or too little gas	Adjust air and gas
	Burner goes into lockout during operation	33 - Probe or ionisation cable grounded	Replace worn parts
10 blinks ● ● ● ● ● ● ● ● ● ●	The burner does not switch on, and the lockout appears	34 - Incorrect electrical wiring	Check
	The burner goes into lockout	35 - Defective control box	Replace
		36 - Presence of electromagnetic disturbances in the thermostat lines	Filter or eliminate
		37 - Presence of electromagnetic disturbance	Use the radio disturbance protection kit
No blink	The burner does not start	38 - No electrical power supply	Close all switches - Check connections
		39 - A limiter or safety control device is open	Adjust or replace
		40 - Line fuse blocked	Replace
		41 - Defective control box	Replace
		42 - No gas supply	Open the manual valves between contactor and train
		43 - Mains gas pressure insufficient	Contact your GAS COMPANY
		44 - Minimum gas pressure switch fails to close	Adjust or replace
		45 - Servomotor fails to move to min. ignition position	Replace
	The burner continues to repeat the start-up cycle, without lockout	46 - The gas pressure in the gas mains lies very close to the value to which the minimum gas pressure switch has been set. The sudden drop in pressure after valve opening causes temporary opening of the pressure switch itself, the valve immediately closes and the burner comes to a halt. Pressure increases again, the pressure switch closes again and the ignition cycle is repeated. And so on	Reduce the minimum gas pressure switch intervention pressure. Replace the gas filter cartridge.
	Ignition with pulsations	47 - Poorly adjusted head	Adjust
		48 - Ignition electrode incorrectly adjusted	Adjust
		49 - Incorrectly adjusted fan air damper: too much air	Adjust
		50 - Output during ignition phase is too high	Reduce
	The burner does not move into the 2nd stage	51 - Remote control device TR fails to close	Adjust or replace
		52 - Defective control box	Replace
		53 - Defective servomotor	Replace
	Burner stops with air damper open	54 - Defective servomotor	Replace

NORMAL OPERATION / FLAME DETECTION TIME

The control box has a further function to guarantee the correct burner operation (signal: **GREEN LED** permanently on).
To use this function, wait at least ten seconds from the burner ignition and then press the control box button for a minimum of 3 seconds.
After releasing the button, the GREEN LED starts flashing as shown in the figure below.

GREEN LED on wait at least 10s	Press button for > 3s	signal	Interval 3s	signal
		● ● ● ● ● ●		● ● ● ● ● ●

The pulses of the LED constitute a signal spaced by approximately 3 seconds.
The number of pulses will measure the probe DETECTION TIME since the opening of gas valves, according to the following table:

SIGNAL	FLAME DETECTION TIME
1 blink ●	0.4s
2 blinks ● ●	0.8s
6 blinks ● ● ● ● ● ●	2.8s

This is updated in every burner start-up.
Once read, the burner repeats the start-up cycle by briefly pressing the control box button.
WARNING
If the result is > 2s, ignition will be retarded.
Check the adjustment of the hydraulic brake of the gas valve, the air damper and the combustion head adjustment.

KIT INTERFACE ADAPTER RMG TO PC Code **3002719**

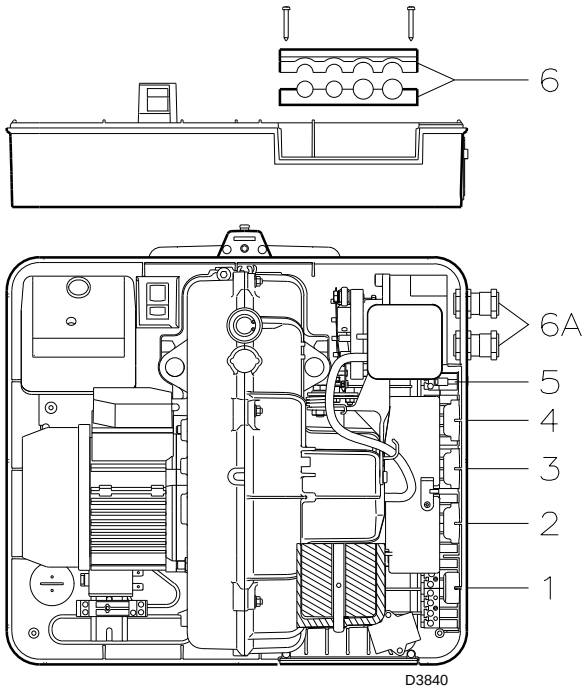

Electrical connections

NOTES

The electrical wiring must be carried out in conformity with the regulations in force in the countries of destination, and by qualified personnel.
Riello S.p.A. cannot accept any responsibility for modifications or connections other than those shown in these diagrams.

Use flexible cables, in accordance with the regulation EN 60 335-1.

All the cables to be connected to the burner must pass through cable grommets.

The use of cable grommets can take various forms; the following lists show one possible solution:

RS 34-44 MZ single phase

1-	7-pole socket for single-phase power supply, thermostat/ pressure switch TL
2-	6-pole socket for gas valves, gas pressure switch or device for checking the valve seal
3-	4-pole socket for thermostat/pressure switch TR
4-	5-pole socket, not used
5-	2-pole socket for accessory min. gas pressure switch
6 - 6A	Fittings for pipe unions (Pierce, if it is necessary to use the pipe unions 6A)

RS 44 MZ three-phase

1-	7-pole socket for single-phase power supply, thermostat/ pressure switch TL
2-	6-pole socket for gas valves, gas pressure switch or device for checking the valve seal
3-	4-pole socket for thermostat/pressure switch TR
4-	5-pole socket for three-phase power supply
5-	2-pole socket for accessory min. gas pressure switch
6 - 6A	Fittings for pipe unions (Pierce, if it is necessary to use the pipe unions 6A)

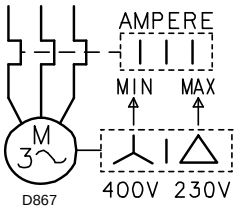

ADJUSTMENT OF THERMAL RELAY (RS 44 MZ THREE PHASE)

This is required to avoid motor burnout in the event of a significant increase in power absorption caused by a missing phase.

- If the motor is star-driven, **400V**, the cursor must be positioned on “MIN”.
- If it is delta-driven, **230V**, the cursor is positioned on “MAX”.

If the scale of the thermal cut-out does not include the absorption of rating of the motor at 400V, the protection is guaranteed anyway.

NOTES

- The RS 44 MZ three-phase model leaves the factory with provision for a **400V** power supply. If **230V** power supply is used, change the motor connection from star to delta and change the setting of the thermal cut-out as well.
- The RS 34 -44 MZ -burners have been type-approved for intermittent operation. This means they should compulsorily be stopped at least once every 24 hours to enable the control box to check its own efficiency at start-up. Normally, the stopping of the burner is guaranteed by the boiler's thermostat/pressure switch. If this is not the case, a time switch should be fitted in series to IN to provide for burner shutdown at least once every 24 hours.
- The burners RS 34-44 MZ leave the factory ready for two-stage operation and must therefore be connected to the thermostat/pressure switch TR. If you want the burner to work with single-phase operation, insert (in place of the thermostat/pressure switch TR) a bridge between the terminals T6 - T8 of the plug X4.

Warning:
- Do not invert the neutral with the phase in the electrical supply line. An inversion would lead to lockout due to firing failure.
- Replace the components only with original spare parts.

识别
产品铭牌上印有序列号、型号、主要技术及性能数据。如果铭牌被篡改、拆除或丢失，产品型号不容易识别，安装或维修过程中会存在潜在危险。

通用警告
为了保证燃烧污染物排放降至最低，锅炉燃烧室的尺寸必须满足特定尺寸。
建议在给特殊锅炉选择燃烧器时，咨询我们的技术支持部门。
有资质人员是指那些经过专业培训机构培训合格的专业技术人员。
该燃烧器只能用于设计时指定的应用。
由于错误安装或错误调整，或不正确或不合理使用，或没有遵照随燃烧器附带的使用说明书来使用，或由无资质人员操作等因素所造成的任何人、畜、财产损失，制造商概不负责。

用户告知
如果燃烧器在点火或运行中出现故障，燃烧器执行“安全停机”，会有红色 LED 指示灯指示燃烧器锁定。要重新启动燃烧器，按一下复位按钮。燃烧器重新启动后，红色 LED 指示灯熄灭。
这个操作最多允许重复 3 次，如果“安全停机”还是发生，请联系我们的技术支持部门。

基本安全规则
‰ 严禁未成年人和无资质人员操作此设备。
‰ 在安装燃烧器房间的通风孔，进气格栅，排气格栅上不允许覆盖衣物、纸张或其他任何东西。
非认证人员不允许维修燃烧器。
拉出或缠绕电源插头是危险的。
‰ 清洁燃烧器前要断开主电源。
‰ 不要使用易燃物来擦拭燃烧器（ 如酒精、汽油等)。
‰ 盖子可以用肥皂水擦拭。
‰ 不要在燃烧器上放置任何东西。
不要在安装燃烧器的房间放置易燃物。

本手册使用的如下符号，解释如下：
⚠ **注意** = 操作者需要特别注意并有所准备。
⛔ **禁止** = 对操作者，**决不允许这样做**。

目录

注意
文中所涉及数字标识定义如下：
1)(A) =图 A 第 1 部分，内容见本页；
1)(A) 页 3 =图 A 第 1 部分，内容见第 3 页。

手册使用指南

介绍

燃烧器随附使用手册：
- 说明书是产品必不可少的组成部分，因此需妥善保管此手册以备查阅；若燃烧器易主，也需随附此手册。若此手册丢失或损毁，可向 RIELLO 本地区技术服务部索取；
- 专为有资质的操作人员编写；
- 内容包括燃烧器的安全安装、启动、使用及维护等重要操作的说明。

系统的交付及使用手册

系统交付使用后，需特别注意以下事项：
- 建议用户将系统制造商提供的使用手册存放于燃烧器安装室内。
- 使用手册内有：
  - 燃烧器序列号

    .....

  - 最近技术支持中心地址及电话；

    .....
    .....
    .....

- 系统供应商需特别告知用户以下内容：
  - 系统的使用，
  - 系统启动前所需的进一步测试，
  - 由制造商或专业技术人员进行至少每年一次的维护或必要的系统检查。

    为保证对系统进行定期检查，RIELLO 建议制定维护维修合同。

技术数据

型号			RS 34 MZ		RS 44 MZ		RS 44 MZ	
类型			883 T		884 T		884 T	
出力 (1)	2 段火	kW Mcal/h	125 - 390 108 - 336		203 - 550 175 - 473		203 - 550 175 - 473	
	1 段火（ 最小出力 ）	kW Mcal/h	45 39		80 69		80 69	
燃料			天然气：G20 - G21 - G22 - G23 - G25					
			G20	G25	G20	G25	G20	G25
- 净热值		kWh/Sm^3 Mcal/Sm^3	9.45 8.2	8.13 7.0	9.45 8.2	8.13 7.0	9.45 8.2	8.13 7.0
- 绝对密度		kg/Sm^3	0.71	0.78	0.71	0.78	0.71	0.78
- 最大耗气量		Sm^3/h	41	48	58	67.6	58	67.6
- 最大耗气量时燃气压力 (2)		mbar	13.1	18.4	16.7	23.2	16.7	23.2
运行			• 间歇式运行 (每 24 小时至少停机 1 次) • 两段火运行 (高火 – 低火) 及单段火运行 (开 - 停)					
标准应用			锅炉类型：热水炉，蒸汽炉，导热油炉					
环境温度		°C	0 - 40					
助燃空气温度		最大 °C	60					
电源		V Hz	230 ~ +/-10% 50/60 - 单相				230 - 400 带零线 ~ +/-10% 50/60 - 三相	
电机		rpm W V	2800/3400 300 220 - 240		2820/3400 420 220 - 240		2820/3400 450 220/240-380/415	
启动电流		A	15		17		14 - 10	
运行电流		A	3.2		3.5		2 - 1.4	
电机电容		µ F/V	12.5/400		12.5/425		-	
点火变压器		V1 - V2 I1 - I2	230 V - 1 x 15kV 1 A - 25mA					
电功率消耗		最大 W	600		700		800	
电气保护等级			IP40					
符合 EEC 标准			90/396 - 89/336 - 2004/108 - 73/23 - 2006/95 - 2006/42					
噪音 (3)	声压 声功率	dBA	68 79		70 81		70 81	
许可		EC	0085BR0381					

(1) 参考条件：环境温度 20°C - 燃气温度 15°C - 气压 1013 mbar - 海拔高度 0 m a. s. l。

(2) 7)(A) 页 4 压力测试点的压力参考条件为燃烧室压力为零且处于最大出力时。

(3) 噪音排放测试根据 EN 15036-1 进行，测量误差为 σ = ± 1.5 dB。噪声于制造商实验室的实验锅炉上测得，且燃烧器处于最大额定出力时的噪声值。

可选机型

型号	电源	燃烧筒长度 mm
RS 34 MZ	单相 单相	216 351
RS 44 MZ	单相 单相 三相 三相	216 351 216 351

燃气类别

适用国家	类别
IT - AT - GR - DK - FI - SE	$II_{2H3B / P}$
ES - GB - IE - PT	II_{2H3P}
NL	$II_{2L3B / P}$
FR	II_{2Er3P}
DE	$II_{2ELL3B /P}$
BE	$I_{2E(R)B}$, I_{3P}
LU	$II_{2E 3B/P}$

配件 (可选):

• 抗电磁干扰防护组件
由于使用变频器，如果燃烧器的安装位置有电磁干扰 (电磁辐射信号强度超过 10 V/m)，或燃烧器安装时温控器接线超过 20 米，可在控制盒和燃烧器之间加装一个抗电磁干扰防护组件作为接口。

燃烧器	**RS 34-44 MZ**
编码	3010386

• 加长燃烧头组件

燃烧器	**RS 34 MZ**	**RS 44 MZ**
编码	3010428	3010429

• **LPG** 燃气运行组件：此组件可使 RS 34-44 MZ 型燃烧器使用 LPG 燃气。

燃烧器	**RS 34 MZ**	**RS 44 MZ**
出力 kW	80/125 - 390 kW	120/200 - 530kW
燃烧筒长度 mm	216 - 351	216 - 351
编码	3010423	3010424

• 最大燃气压力开关组件	编码 3010418
• 无源接触器组件	编码 3010419
• 后吹扫组件	编码 3010452
• 接地故障断路器组件	编码 3010448
• 持续吹扫组件	编码 3010449
• 计时器	编码 3010450
• **RMG** 连接 **PC** 的接口适配器组件	编码 3002719

• 燃气阀组与燃烧器的连接符合 **EN 676** 标准 **(** 包括各阀门、调压器和过滤器 **):** 见第 9 页。

重要提示：本手册未列之附加安全设备由安装人员负责。

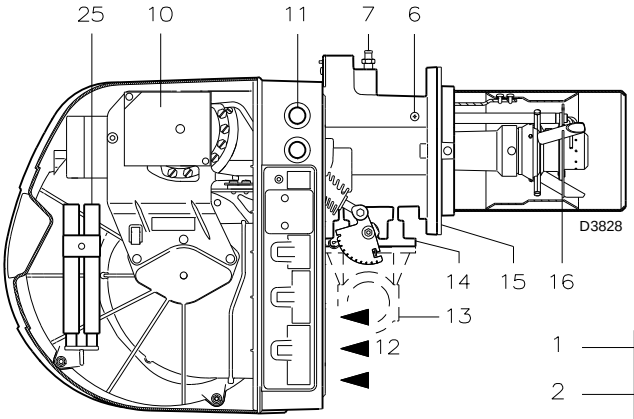

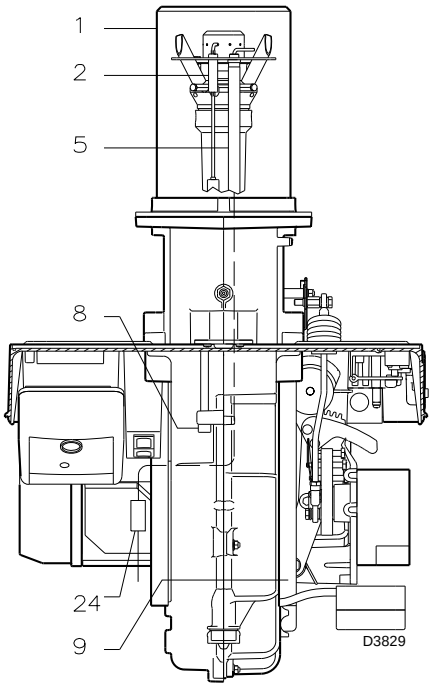

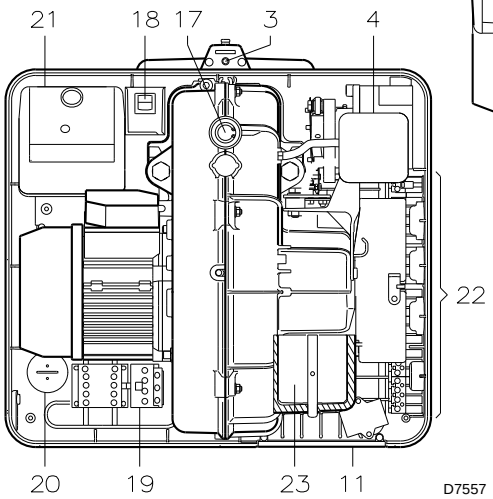

(A)

mm	A	B	C	kg
RS 34 MZ	1000	500	485	32
RS 44 MZ	1000	500	485	33

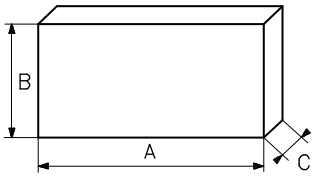

(B)

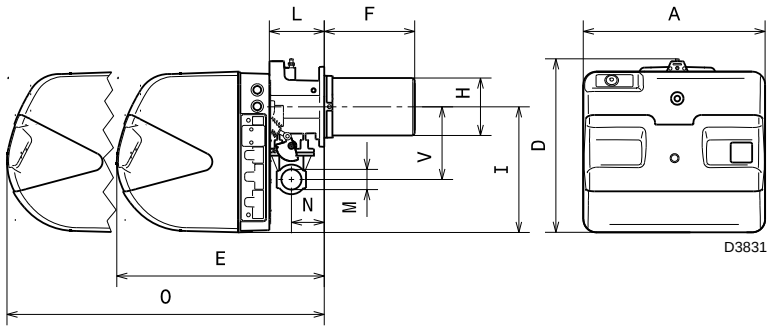

(C)

mm	A	D	E	F (1)	H	I	L	O	N	V	M
RS 34 MZ	442	422	508	216-351	140	305	138	780	84	177	1”1/2
RS 44 MZ	442	422	508	216-351	152	305	138	780	84	177	1”1/2

(1) 燃烧筒：标准 - 加长

燃烧器描述 (A)

1 燃烧头
2 点火电极
3 调整燃烧头用螺丝
4 最小空气压力开关
(微分运行模式)
5 火焰探测器
6 空气压力测试点
7 燃气压力测试点以及固定燃烧头用螺丝
8 将风机固定到套管接口用螺丝
9 打开燃烧器及检查燃烧头用的滑杆
10 伺服电机, 控制燃气蝶阀以及风门挡板(通过可变凸轮进行调整)。
燃烧器停机时，风门挡板完全关闭以减少因风机进气口吸入空气而造成的热量损失。
11 穿电缆用导缆孔
12 风机进气口
13 燃气进气管路
14 燃气蝶阀
15 连接锅炉的法兰
16 稳焰盘
17 火焰检查窗
18 两个开关：
- 之一 燃烧器 “停 – 开”开关
- 之二 “1 段火 - 2 段火”运行模式装换开关
19 带复位按钮的电机触发器和热断路器 (RS 44 MZ 三相)
20 电机电容 (RS 34-44 MZ 单相)
21 带锁定指示灯及复位按钮的控制盒
22 电气连接插座
23 风门挡板
24 电离探针电缆上用插头 – 插座
25 滑杆加长杆 (安装加长燃烧头时使用)

两种燃烧器锁定：

- 控制盒锁定：
  如果控制盒按钮 21)(A) 指示灯红亮，则燃烧器锁定。
  如需复位，可按该按钮。
- 电机锁定 (RS 44 MZ 三相)：
  三相电源；按下热继电器按钮 19)(A) 以恢复供电。

包装 - 重量 (B) - 近似值

- 燃烧器外包装为纸箱，其最大尺寸见表 (B)。
- 燃烧器连同包装箱重量见表 (B)

外观尺寸 (C)

近似值
燃烧器的外观尺寸见表 (C)。
注意：检查燃烧头时需要将燃烧器沿滑杆拉出。

标准配置

1 - 燃气阀组法兰
1 - 法兰垫片
4 - 法兰安装螺丝 M 8 x 25
4 - 固定燃烧器法兰到锅炉上的螺丝：M 8 x 25
1 - 隔热垫
3 - 电气连接插头
(RS 34-44 MZ 单相)
4 - 电气连接插头
(RS 44 MZ 三相)
1 - 说明书
1 - 零配件表

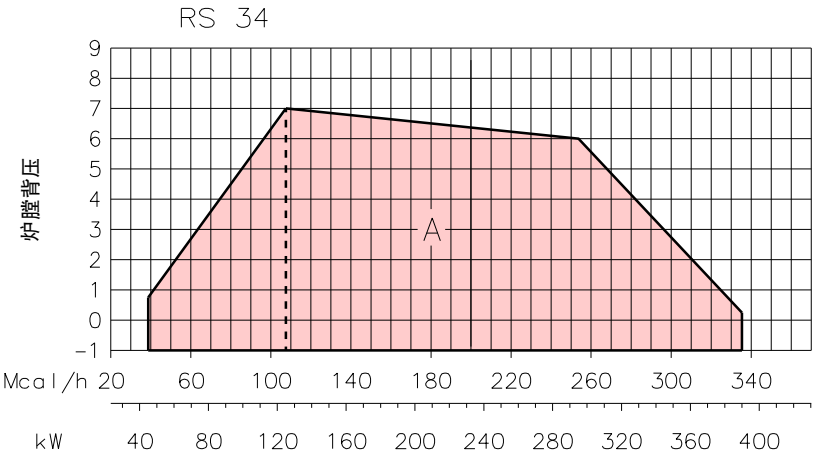

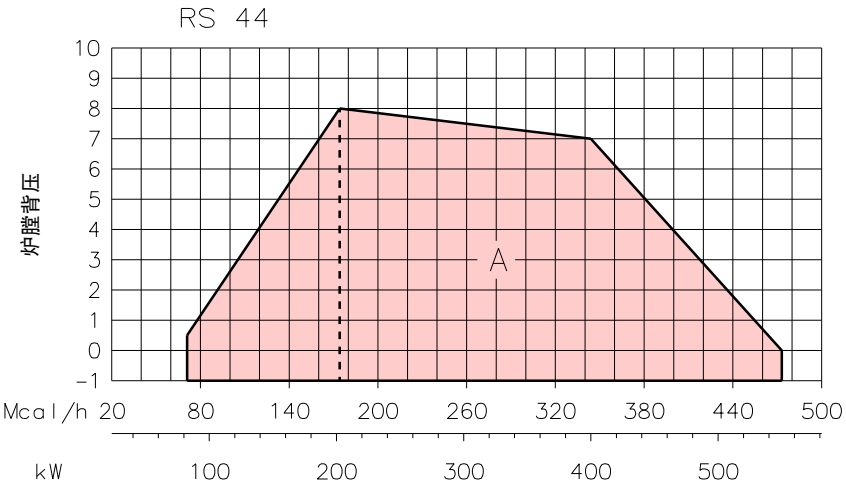

(A) D9304

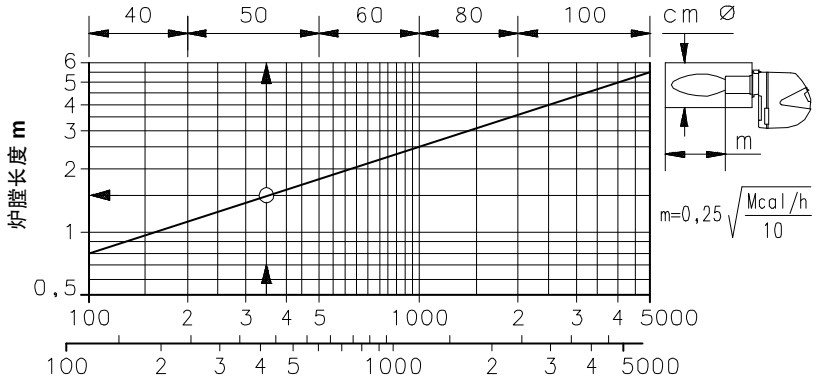

(B) D497

出力图 (A)

在运行中，燃烧器的出力范围为：

- 最大出力，在 A 区内选择，
- 最小出力，不得低于图中所示的最小值：

RS 34 MZ = 45 kW
RS 44 MZ = 80 kW

注意
出力曲线的出力值在如下条件下获得：环境温度 20 °C，大气压 1013 mbar (约 0 m 海拔)，燃烧头按第 8 页所示进行调整。

测试锅炉 **(B)**
出力曲线根据 EN 676 标准在专用测试锅炉上获得。
图 (B) 为测试锅炉的炉膛直径及长度。
举例
出力 350 Mcal/h：
直径 = 50 cm ；长度 = 1.5 m。

商用锅炉
如果燃烧器类型符合 CE 认证，且锅炉炉膛尺寸与图 (B) 所列值近似，则燃烧器与锅炉的匹配不会出现问题。
如果燃烧器必须用在未经CE认证的商用锅炉上，且该锅炉炉膛尺寸明显小于图 (B) 所列值，请咨询制造商。
另外，对中心回燃式锅炉，建议对照锅炉制造商的说明查看其燃烧头长度。

RS 34 MZ Δp (mbar)

kW	1	2	3				
			MB 407 S2 (Rp 3/4")	MB 410 S2 (Rp 1")	MB 412 S2 (Rp 1.1/4")	MB 415 S2 (Rp 1.1/2")	MB 420 S2 (Rp 2")
130	1,5	0,1	8,6	4,4	2,3	--	--
140	2,0	0,1	9,7	5,0	2,6	--	--
160	2,9	0,1	12,3	6,2	3,2	--	--
180	3,8	0,2	15,1	7,6	3,8	--	--
200	4,6	0,2	18,1	9,0	4,5	--	--
220	5,5	0,3	21,2	10,6	5,3	--	--
240	6,4	0,3	24,6	12,3	6,1	3,2	--
260	7,3	0,4	28,2	14,1	6,9	3,5	--
280	8,2	0,4	32,3	16,0	7,8	3,9	--
300	9,1	0,5	36,6	18,0	8,7	4,3	--
320	10,0	0,5	41,2	20,0	9,6	4,7	3,2
340	10,9	0,6	45,6	22,0	10,7	5,1	3,3
360	11,8	0,7	50,2	23,9	11,8	5,6	3,5
380	12,7	0,8	54,9	26,0	13,0	6,0	3,8
390	13,1	0,8	57,4	27,0	13,5	6,3	4,0

RS 44 MZ Δp (mbar)

kW	1	2	3					
			MB 407 S2 (Rp 3/4")	MB 407 S5 (Rp 3/4")	MB 410 S2 (Rp 1.1/4")	MB 412 S2 (Rp 1.1/4")	MB 415 S2 (Rp 1.1/2")	MB 420 S2 (Rp 2")
200	3,0	0,2	18,1	18,1	9,0	4,5	--	--
225	4,0	0,3	22,1	22,1	11,0	5,5	3,2	--
250	4,9	0,3	26,4	26,4	13,2	6,5	3,3	--
275	5,9	0,4	31,3	31,3	15,5	7,6	3,8	--
300	6,9	0,5	36,6	36,6	18,0	8,7	4,3	--
325	7,9	0,6	42,2	42,2	20,5	9,9	4,8	3,2
350	8,9	0,6	47,8	47,8	22,9	11,2	5,4	3,4
375	9,8	0,7	53,7	53,7	25,4	12,7	5,9	3,8
400	10,8	0,8		59,9	28,1	14,0	6,5	4,1
425	11,8	1,0		66,4	30,8	15,4	7,1	4,5
450	12,8	1,1		73,2	33,6	16,8	7,7	4,9
475	13,8	1,2		80,3	36,5	18,3	8,3	5,3
500	14,7	1,3		87,6	39,5	19,8	9,0	5,7
525	15,7	1,5		95,1	42,6	21,4	9,6	6,1
550	16,7	1,6		103,0	45,8	23,1	10,2	6,6

(A)

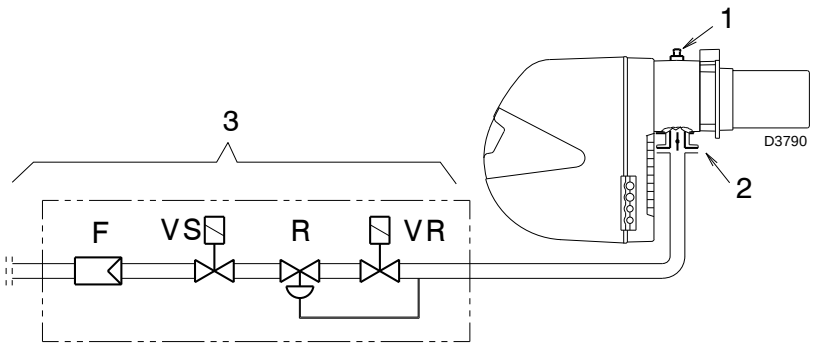

(B)

燃气压力

左表列出燃烧器在最大出力运行时，燃气供应管路的最小压力损失。

栏 1

燃烧头压力损失。

测试点 1)(B) 处的燃气压力，此时炉膛压力为 0 mbar。

栏 2

燃气蝶阀 2)(B) 在最大开度 90° 时的压力损失。

栏 3

燃气阀组 3)(B) 的压力损失包括：调节阀 VR，安全阀 VS (两个全开)，调压器 R，过滤器 F。

各表中所列数值为：

天然气 G 20 PCI 9.45 kWh/Sm^3

(8.2 Mcal/Sm^3)

如果使用天然气 G 25 PCI 8.13 kWh/Sm^3

(7.0 Mcal/Sm^3)

表中数值乘以一个系数：

- 栏 1-2：乘 1.5 ；
- 栏 3：乘 1.35。

计算燃烧器的最大大概出力，可按如下方法进行:

- 将测试点 1)(B) 处测得的燃气压力减去炉膛背压。
- 找到相应燃烧器的图表，然后查出与用公式计算得数最接近的燃气压力值。
- 读出左边相应的出力值。

举例 **- RS 34 MZ:**

- 燃烧器以最大出力运行
- 天然气 G 20 PCI 9.45 kWh/Sm^3
- 测试点 1)(B) 处燃气压力 =9.3 mbar
- 炉膛背压 = 2 mbar

9.3 - 2 =7.3 mbar

在表 RS 34 MZ 中，与压力为 7.3 mbar (栏 1) 相对应的出力为 260 kW 。

此值只能作为参考值，精确的出力值应根据燃气计量表测量。

为了计算压力测试点 1)(B) 处的燃气压力，将燃烧器设定为最大出力运行：

- 在表中找出相关燃烧器的近似出力值。
- 读出右边栏 1 中压力测试点 1)(B) 处的压力值。
- 将此压力值与与炉膛估计压力相加。

举例 **- RS 34 MZ:**

- 所需燃烧器运行最大出力：260 kW
- 天然气 G 20 PCI 9.45 kWh/Sm^3
- 表 RS 34 MZ，栏 1 中所示，燃烧器出力为 260 kW 时的燃气压力。 =7.3 mbar
- 炉膛背压 = 2 mbar

7.3 + 2 =9.3 mbar

压力测试点 1)(B) 处所需压力。

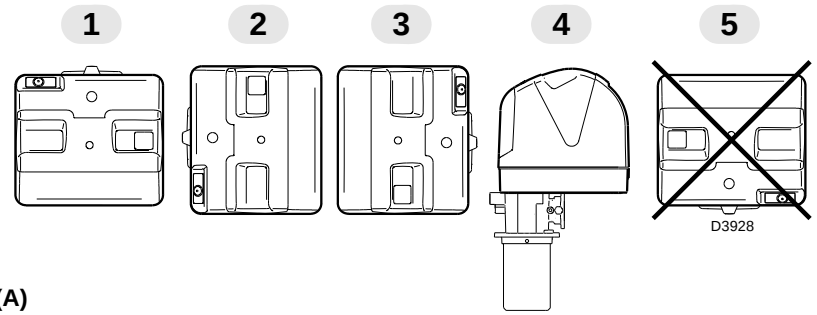

(A)

mm	A	B	C
RS 34 MZ	160	224	M 8
RS 44 MZ	160	224	M 8

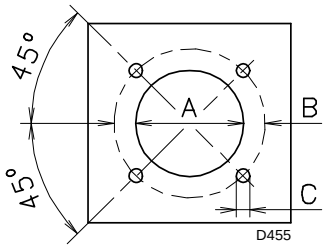

(B)

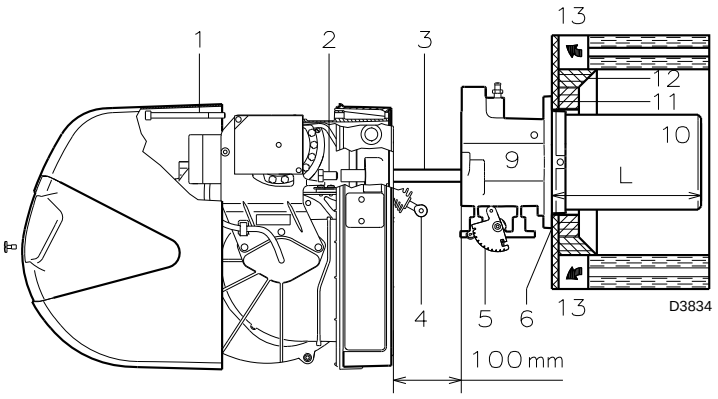

(C)

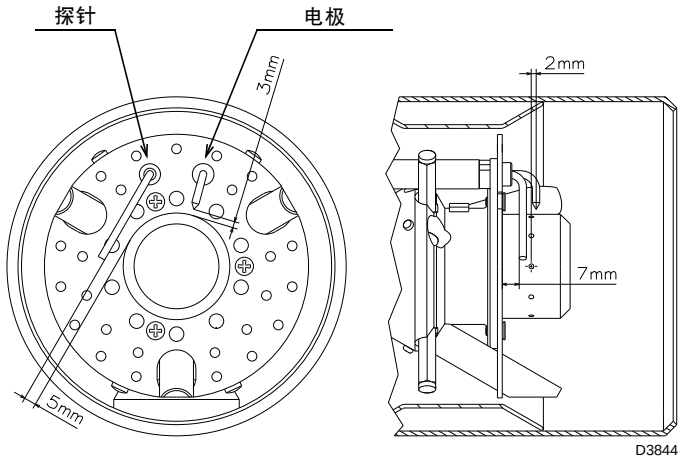

(D)

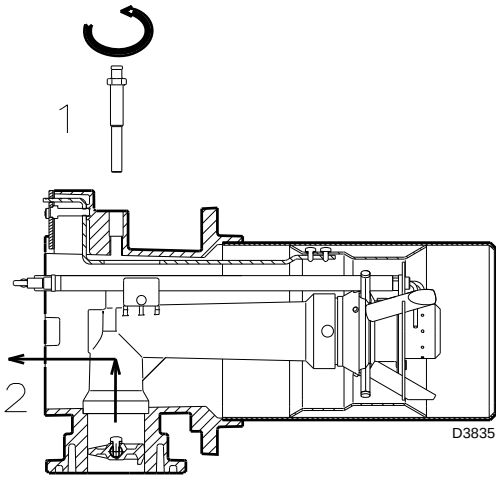

(E)

安装

⚠ 燃烧器的安装必须符合当地的法律法规。

安装位置 **(A)**

⚠ 燃烧器只能采用安装位置 **1, 2, 3** 及 **4**。安装位置 **1** 为最优，因为只有此位置才能如本手册所述对燃烧器进行维护。安装位置 **2**，**3** 及 **4** 可以运行燃烧器，但不利于维护和检修燃烧头，见第 15 页。

⛔ 任何其它的安装位置都可能对燃烧器的正常运行带来危害。
为保证安全，禁止燃烧器采用安装位置 **5**。

锅炉钢板 **(B)**

如 (B) 所示，在炉膛定位板上钻孔。随燃烧器提供的隔热垫可帮助确定螺栓孔的位置。

燃烧筒长度 **(C)**

必须根据锅炉生产商提供的数据选择合适长度的燃烧筒，且在任何情况下其厚度必须大于锅炉钢板加炉衬的厚度之和。
可选的长度范围 L (mm) 如下：

燃烧筒 10)	RS 34 MZ	RS 44 MZ
• 标准	216	216
• 加长	351	351

对于带前烟道13) 或中心回焰炉膛的锅炉，必须在锅炉炉衬 12) 和燃烧筒 10) 之间安装用耐火材料制成的保护性炉衬 11)。
此保护性炉衬不得妨碍取下燃烧筒。
带前水冷壁的锅炉，则不需要耐火材料制成的炉衬 11)-12)(C)，除非锅炉制造商另有要求。

将燃烧器安装到锅炉 **(C)**

在将燃烧器安装到锅炉之前，检查（ 从燃烧筒开口处 ）探针和电极连接是否正确，如图 (D) 所示。

从燃烧器上取下燃烧头，如图 (C)：
- 从刻度指示盘 5) 解开连杆 4) 的连接；
- 从滑杆 3) 上取下螺丝 2) ；
- 取下螺丝 1)，将燃烧器沿滑杆 3) 拉出大约 100 mm ；
- 断开探针及点火电极连接，将燃烧器从滑杆上完全取下。

将燃烧器 9)(C) 安装到锅炉钢板上，并在二者间安装隔热垫 6)(C)。使用随附的4个螺丝固定。燃烧器和锅炉之间的密封必须达到气密标准。

如果进行上述检查时发现探针及电极的位置不正确， 可拆下螺丝 1)(E)，取出燃烧头内部部件 2)(E)，然后对探针和电极进行调整。请勿旋转探针：应使其如 (D) 所示。如果探针位置距离点火电极太近，可能会损害控制盒放大器。

⚠ 特别注意
随后安装燃烧头内部部件 2)(E) 时，用 **4 ~ 6 Nm** 规格的扳手将螺丝 1)(E) 拧紧。

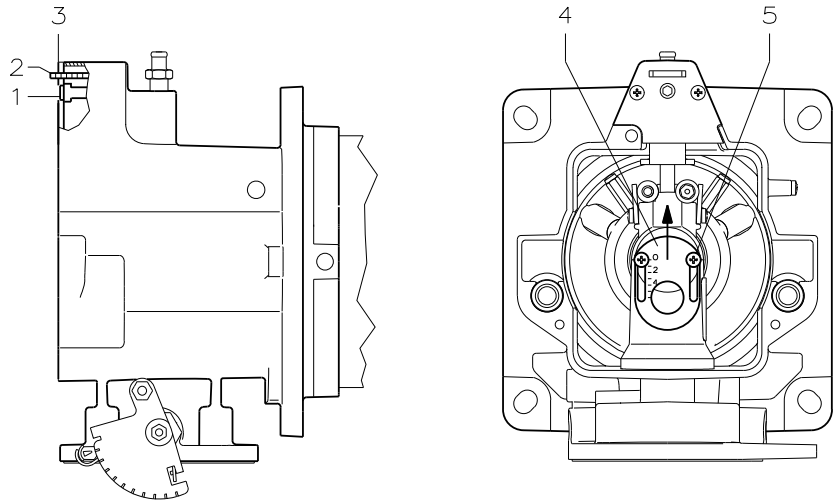

(A) D8458

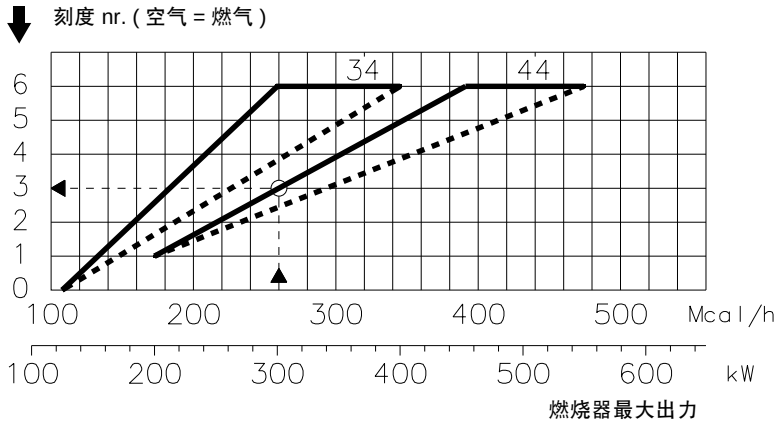

(B) D3837

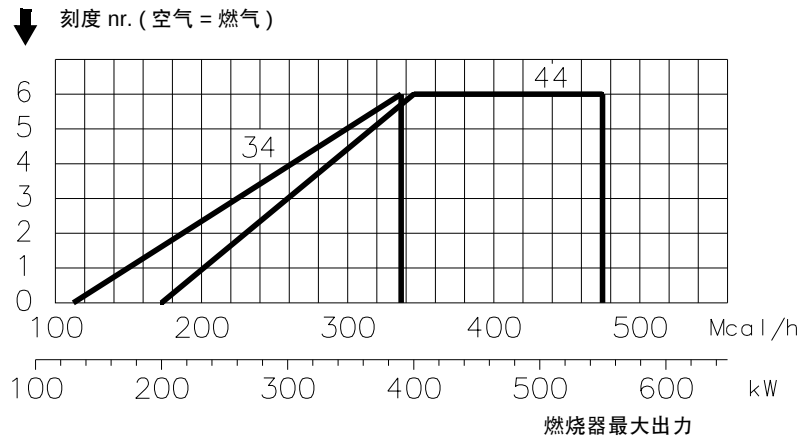

(C) D8577

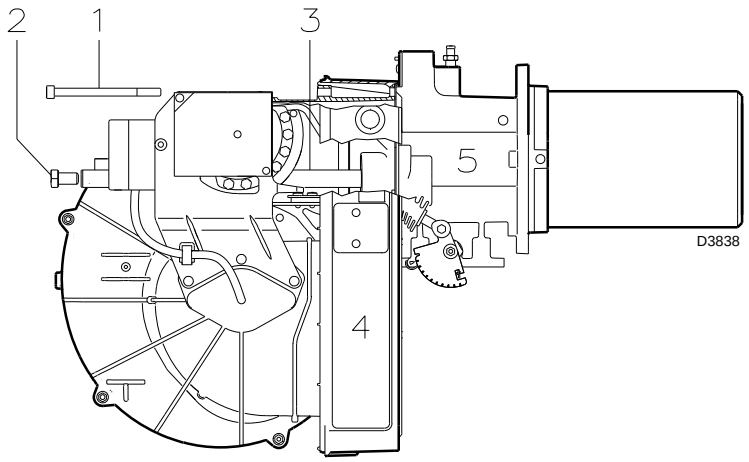

(D)

燃烧头调整

安装进行到这一阶段，如图 (A) 所示，已经将燃烧筒和管路接口安装到锅炉上。这样可以很容易的调整燃烧头。

空气调整 **(A - B)**

旋转螺丝 1)(A) 直至指示杆 2)(A) 上的刻槽与面板 3)(A) 的表面对齐。

举例：

RS 44 MZ 型燃烧器 出力 = 300 kW。

如图 (B) 所示，燃烧器最大出力为 300 kW 时，空气应调整至刻度 3。此时，燃烧头处的压力损失如第 6 页栏 1 所示。

注意

如果燃烧室压力为 0 mbar 时，需按图 (B) 阴影线所示调整空气。

中心风量调整 **(A - C)**

在需要精确调试的应用中，可将调节环 4)(A)调至图 (C) 所示刻度，对中心送风进行调整。

要进行该操作，则应先拧松螺丝 5)(A)，将调节环 4)(A) 的位置升高，然后再将螺丝 5)(A) 拧紧。

燃烧头调整完成后，将燃烧器 4)(D) 重新装回到滑杆 3)(D) 上，距燃气管路接口处 5)(D) 约 100mm，此时燃烧器位置如图 (C) 页 7，接好探针及点火电极电缆，然后完全关闭燃烧器，直至图 (D) 所示位置。

将螺丝 2) 重新装回滑杆 3) 上。

用螺丝 1) 固定好燃烧器。

注意

将燃烧器重新安回两个滑杆上后，建议轻轻的拉出高压电缆以及火焰探针电缆，直至它们被轻轻的拉紧。

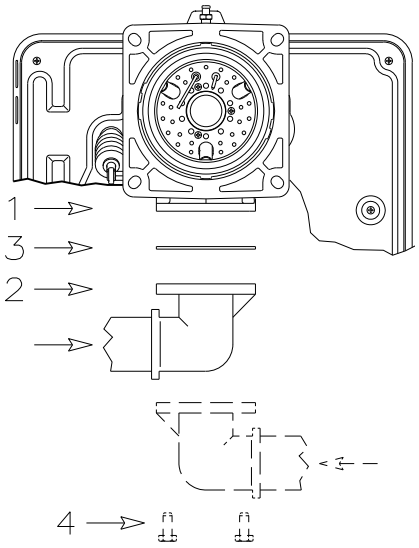

(A) D3839

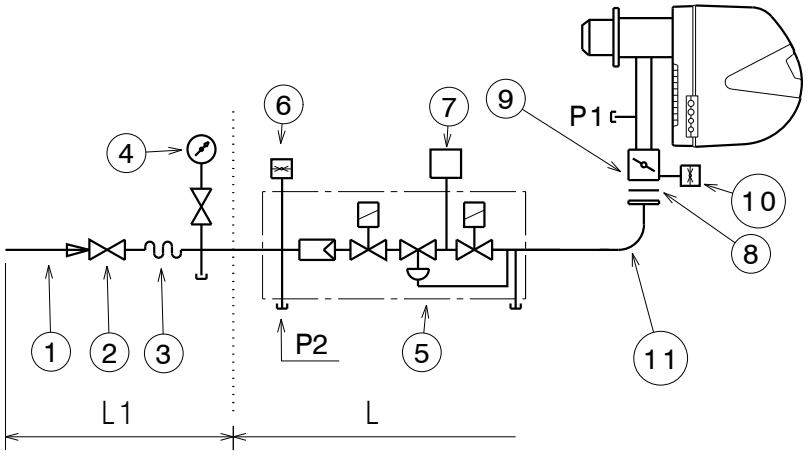

(B) D3791

符合 **EN 676** 标准的燃烧器及其相关燃气阀组

燃气阀组 L				燃烧器		7	11
编码	型号	Ø	C.T.	RS 34 MZ	RS 44 MZ	编码	编码
3970599	MB-DLE 407 S52	3/4”	-	-	•	-	3000824
3970553 3970229*	MB-DLE 407 S20	3/4”	-	•	•	3010123	3000824
3970554 3970230*	MB-DLE 410 S20	1”	-	•	•	3010123	3000824
3970144 3970231*	MB-DLE 412 S20	1”1/4	-	•	•	3010123	-
3970180 3970232*	MB-DLE 415 S20	1”1/2	-	•	•	3010123	-
3970181 3970233* 3970182 3970234*	MB-DLE 420 S20	2”	- - ♦ ♦	•	•	3010123 3010123 - -	3000822

* 可连接燃烧器的带 **6** 针插头的燃气阀组。

(C)

燃气供应管路

- 用随燃烧器所附之法兰2)，垫片3)，及螺丝4)将燃气阀组与燃气管路附件 1)(A) 连接。
- 燃气阀组可从燃烧器的左边或右边进行安装，视具体情况，以方便安装为宜，见图 (A)。
- 燃气阀组必须尽可能靠近燃烧器以确保燃气在3秒的安全时间内达到燃烧头。

燃气阀组 **(B)**

燃气阀组符合 EN 676 标准，不包含在燃烧器内，为单独订购组件，编码见表 (C)。

图示 **(B)**

1 －燃气进气管路
2 －手动阀
3 －减震器
4 －带按钮的压力表
5 - 一体式阀组，包括：
  - 过滤器 (可更换)
  - 运行阀
  - 调压器
6 －最小燃气压力开关
7 －燃气阀泄漏检查装置。
  按 EN 676 标准要求，最大出力大于 1200kW 的燃烧器必须强制安装泄漏检测装置。
8 －垫圈
9 - 燃气调整蝶阀
10 - 最大燃气压力开关 (配件)
11 －燃气阀组 / 燃烧器适配器

P1 - 燃烧头处压力
P2 - 蝶阀 / 调压器之前的燃气压力

L - 需单独订购的燃气阀组编码见表 (C)
L1 - 由安装人员负责

表 **(C)** 示例

C.T.= 燃气阀组泄漏检测装置：
  - = 不带泄漏检测装置的燃气阀组；泄漏检测装置可单独订购，再进行安装 (参见栏 7)。
  ♦= 带 VPS 泄漏检测装置的燃气阀组。
7 = VPS 泄漏检测装置。
  如需要，可单独为燃气阀组订购此装置。
11 = 燃气阀组 / 燃烧器适配器。
  如需要，可单独为燃气阀组订购此装置。

注意

调整燃气阀组请参看随附手册信息。

最小燃气压力开关　　最低空气压力开关

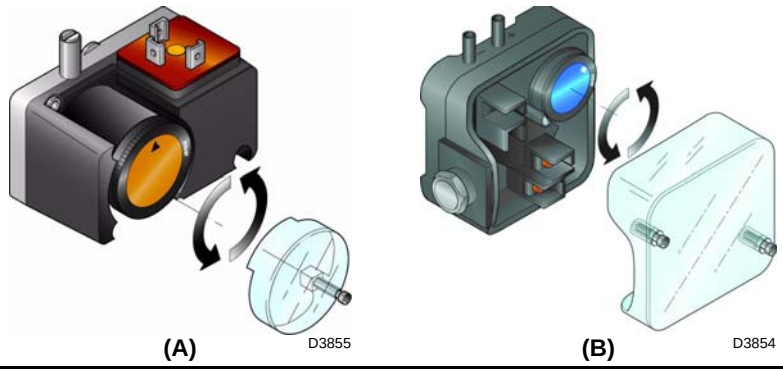

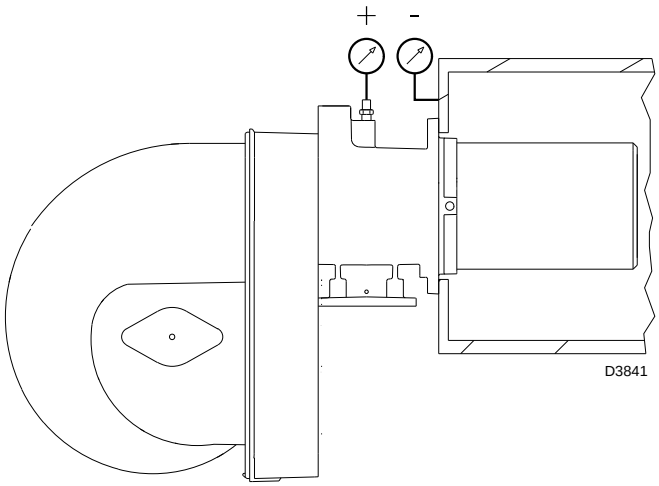

(C)

伺服电机

(D)

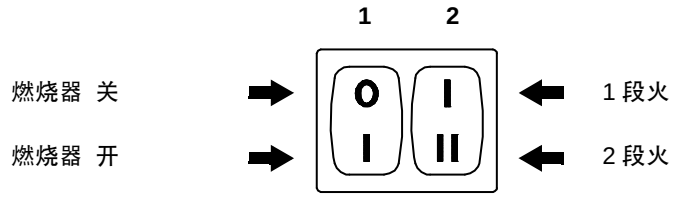

(E)

D469

点火前调试

⚠ **特别注意**

燃烧器初次点火必须使用正确工具，由具有资质的专业人员操作。

按第 8 页所述调整燃烧头以及空气。

另外，还需对以下方面进行调整：

- 打开燃气阀组前的手动阀。
- 调整最小燃气压力开关到量程的开始位置 (A)。
- 调整空气压力开关到量程的开始位置 (B)。
- 排尽燃气管路中的空气。
  连续排放空气（建议使用一根塑料管接到室外排放）直至闻到燃气的味道。
- 在管路连接的压力测试点处安装一个压力表 (C)。
  根据第 6 页上的表，可用压力表上的读数来计算燃烧器的最大出力。
- 连接两个灯泡或测试仪到两个电磁阀 VR 和 VS 上，用以检查何时供电。
  如果两个电磁阀已安装了指示灯显示何时通过电流，则无需进行此步骤。

启动燃烧器前，最好先调整燃气阀组以便燃烧器能在最安全的情况下点火，如使燃气量最小。

伺服电机 **(D)**

伺服电机通过可变轮廓线凸轮实现同步调节风门和燃气蝶阀。

伺服电机旋转角度与控制燃气蝶阀开启程度的刻度盘所示角度相等。伺服电机12 秒内旋转90度。

请勿改变以下 4 个凸轮的出厂设定值：只需检查各凸轮的设置是否与以下所述相符：

凸轮 **St2** **: 90°**

最大旋转角度。燃烧器以 2 段火模式运行时，燃气蝶阀必须全开，角度为 90°。

凸轮 **St0** **: 0°**

最小旋转角度。燃烧器停机时，风门阀及燃气蝶阀必须全关，角度为 0°。

凸轮 **St1** **: 15°**

调整点火位置及 1 段火运行出力。

凸轮 **MV**

备用。

燃烧器启动

闭合远程控制装置 TR，并进行如下设置：

- 并将开关 1)(E) 置于 燃烧器 “ON”的位置。
- 并将开关 2)(E) 置于 “1 段火运行”位置。

燃烧器一启动，通过火焰检查窗 17)(A) 页 4 检查风机叶片旋转方向。

确认连接到电磁阀上的灯泡或测试仪，或电磁阀自带的指示灯，显示电磁阀未通电。如果显示电磁阀通电，则应立即将燃烧器停机，并检查电气连接。

燃烧器点火

完成以上检查步骤后，可进行燃烧器点火。如果电机启动，但未产生火焰，且控制盒锁定，则复位并等待下一次点火。如果点火仍未成功，有可能是燃气在 3 秒的安全时间内未到达燃烧头。在此情况下，应增加点火燃气量。燃气是否到的燃烧头可通过 U 型压力表 (C) 查看。一旦点火成功，即可进行全面的校准工作。

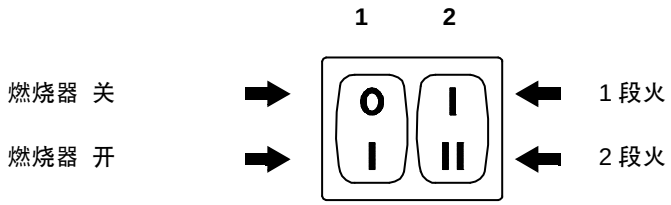

(A) D469

燃烧器校准

燃烧器的优化校准需要在锅炉排烟口安装烟气分析仪。

按如下顺次调整：
1 - 2 段火燃烧器出力
2 - 1 段火燃烧器出力
3 - 中间出力
4 - 空气压力开关
5 - 最小燃气压力开关

确定燃烧器点火时出力 **(** 最小出力）
根据 EN 676 标准

燃烧器最大出力为 120 kW 时
点火出力可以为燃烧器运行最大出力。举例：
- 运行最大出力 ：120 kW
- 点火最大出力 ：120 kW

燃烧器最大出力高于 120 kW 时
点火出力必须低于燃烧器运行最大出力。
若点火出力低于 120 kW，无需进行另外计算。若点火出力高于 120 kW，EN 676 标准规定点火出力应根据控制盒所标明的安全时间"ts"进行调整。
当 "ts" = 3s 时，点火出力必须小于等于燃烧器运行最大出力的 1/3。

举例
燃烧器最大出力为 450 kW
当 ts = 3s 时，点火出力必须小于等于 150 kW

如何测定点火出力：
- 将电离探针电缆上的插头−插座24)(A) 页4断电（燃烧器点火，安全时间后进入锁定状态）。
− 在持续的锁定状态下进行点火 10 次。
- 在燃气表上读出消耗的燃气量。
  当 ts = 3s 时，此燃气量应小于或等于根据以下公式所计算出的数值：

$$Vg = \frac{Qa\ (\text{燃烧器最大供气量})\ \mathbf{x\ n\ x\ ts}}{3600}$$

Vg: 点火时所需燃气量 (Sm^3)
Qa: 点火时燃烧器供气量 (Sm^3/h)
n: 点火次数 (10)
ts: 安全时间（秒）

举例 天然气 G 20 (9.45 kWh/Sm^3)：
点火出力为 150 kW 时
相应的供气量为 15.87 Sm^3/h。
持续的锁定状态下进行点火 10 次后，燃气表上显示的供气量必须等于或小于：

$$Vg = \frac{15.87 \times 10 \times 3}{3600} = 0.132\ Sm^3$$

---

1 - 2 段火燃烧器出力
燃烧器 2 段火出力必须按照第 5 页所示的出力范围进行设置。
按上述说明操作时，燃烧器处于 1 段火运行。现在将开关 2)(A) 置于 2 段火运行位置：伺服电机开启风门阀，同时开启燃气蝶阀至 90°。
燃气量调整
根据燃气表测定燃气量。
可根据第 6 页上的表格计算出合理的供气量，在压力计上读出燃气压力，见第 10 页图 (C)，然后按第 6 页上说明进行计算。
- 如需减小供气量，则可降低燃气压；如果此时压力已经较低，则可关闭调节阀 VR。
− 如需增大供气量，增大燃气压力。

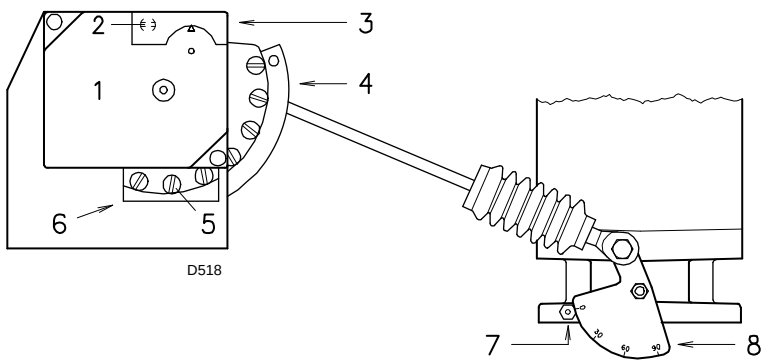

1 伺服电机

2 凸轮 4 ⊖ 连接 / ⦶ 脱开

3 凸轮盖

4 可变外形凸轮

5 调整凸轮轮廓线螺丝

6 可对螺丝 5 进行操作的开孔

7 刻度盘 8 的刻度

8 燃气蝶阀开启角度指示盘

(A)

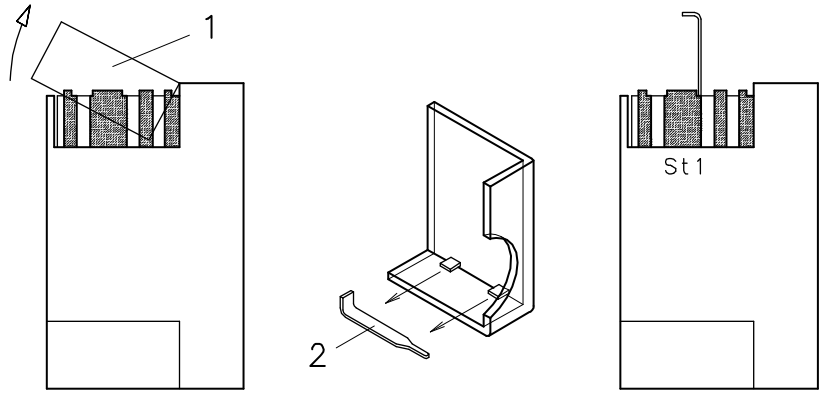

(B)

D520

空气量调整

通过调节螺丝 6)(A) 逐步调整凸轮 4)(A) 的外轮廓线。

– 顺时针调整螺丝增大空气量。

– 逆时针调整螺丝减小空气量。

2 - 1 段火燃烧器出力

燃烧器的 1 段火出力必须设定在第 5 页所示出力范围内。

将按钮 2)(A) 页 11 置于 1 段火运行位置：伺服电机 1)(A) 关闭风门及燃气蝶阀至 15° 角 ，此为工厂最初设定的调整位置。

调整燃气量

根据气量计测定燃气供气量。

- 如需减小供气量，可依次逐步减小凸轮 St1 (B) 的角度 15° 至 13° 至 11°.....
- 如需增加供气量，将开关 2)(A) 页 11 置于 2 段火运行位置，并依次逐步增加凸轮 St1 的角度 (B) 如 15° 至 17° 至 19°....
  此时，可回到 1 段火运行模式，并测量供气量。

注意

当凸轮 St1 角度减小时，伺服电机随着凸轮的调节而调节。如需增大凸轮角度， 则先调至 2 段火运行位置，增大角度，然后再回调至 1 段火运行位置，以测试凸轮调节的有效性。

如果增大 St1 的角度，而燃烧器处于 1 段火运行时，燃烧器会锁定。

要调整凸轮 St1，按压并取下凸轮盖 1)，如图 (B) 所示，从中取出调整钥匙 2)，插在凸轮 St1 的插槽中。

风量调整

通过调整孔 6)(A) 调节螺丝以逐步调整凸轮 4)(A) 的起始廓线。最好不要调整第一个螺丝，因为此螺丝用于将风门阀完全关闭。

3 - 中间出力

燃气量调整

此时无需调整燃气供应量。

风量调整

使用开关 1)(A) 页 11 关闭燃烧器，脱开凸轮，将伺服电机轴槽调整至垂直位置，旋转凸轮中心的螺丝，使其形成一个平滑的角度，然后用手前后转动凸轮，检查其转动是否平滑且无卡涩。

不要凸轮两端的螺丝位置，此位置已经被调整至控制 1 段火和 2 段火运行时风挡的位置。

注意

一旦完成对 “2 段火 – 1 段火 – 中间” 出力的调整，再次检查点火：此时的噪音水平应与燃烧器点火后运行时的噪音水平相当。如果燃烧器出现任何震动，应减小点火时的燃气供应量。

空气压力开关 4)(A) 页 4

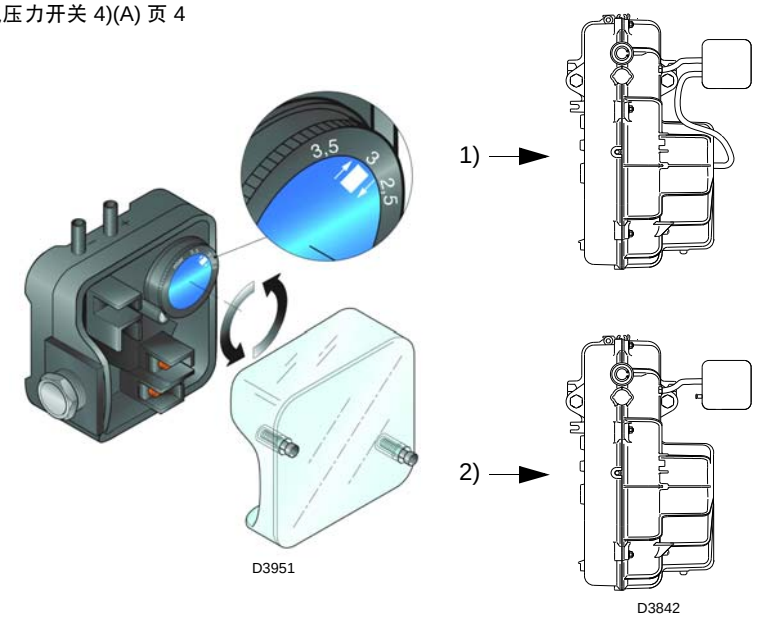

(A)

最小燃气压力开关

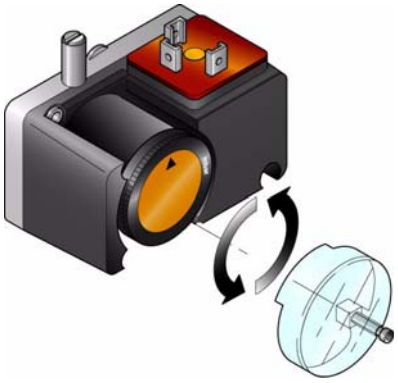

(B)

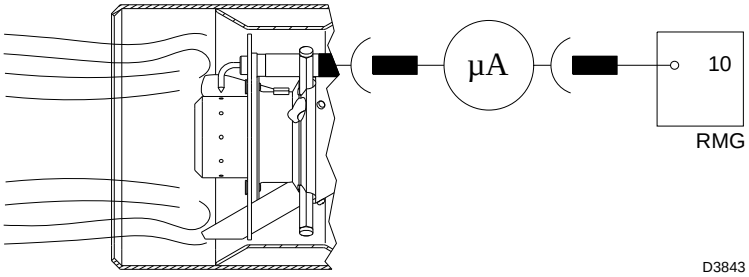

(C)

4 - 空气压力开关 **(A)**

在进行上述燃烧器各部分调整时，空气压力开关置于量程 (A) 的开始位置。上述所有调整结束后，方可调整空气压力开关。

当燃烧器运行处于 1 段火运行时，顺时针转动压力调整旋钮，增大压力直至燃烧器锁定。

然后将调节旋钮逆时针回调约 20%，重新启动燃烧器以确认其运行正常。

如果燃烧器再次锁定，则沿逆时针方向继续微调压力调节旋钮。

注意：通常，空气压力开关必须保证烟气中 CO 浓度不超过 1% (10,000 ppm)。

要检测此项，在锅炉烟囱内插入烟气分析仪，慢慢关小风机进风口（如可使用厚纸板慢慢遮挡），在烟气中 CO 浓度超过 1% 时，检查燃烧器是否锁定。

空气压力开关如果连接两个管路的话，则以“微分”模式运行。如果在预吹扫阶段锅炉炉膛内出现负压，无法闭合空气压力开关，需在空气压力开关和风机进风口之间连接软管。这样，空气压力开关就能以微分压力开关模式运行。

注意：以“微分”模式工作时，空气压力开关只适用于工业领域，或符合当地允许空气压力开关仅控制风机运行而不涉及 CO 排放的规定。

5 - 最小燃气压力开关 **(B)**

上述调整结束后，开始调整最小燃气压力开关，此时开关位置应置于量程开始位置 (B)。

当燃烧器以 2 段火运行时，通过顺时针旋转压力调节旋钮增大压力直至燃烧器锁定。

然后，逆时针旋转旋钮 2 mbar，使燃烧器重新启动以确保燃烧器运行正常。

若此时燃烧器再次锁定，继续沿逆时针方向旋转旋钮 1 mbar。

火焰状态检查 **(C)**

燃烧器带有一个电离系统，可以保证对火焰状态进行检查。控制盒的最小运行电流为 6 µA。燃烧器提供更大的电流，因此一般不需要控制电流的强度。但是，如需测量电离电流，则先断开电离探针电缆上的插头 – 插座 24)(A) 页 4，然后安装一个量程为 100 µA 的微安计。安装时需仔细检查电极连接是否正确！

正常火焰
(n° = 从 0 秒开始计算的秒数)

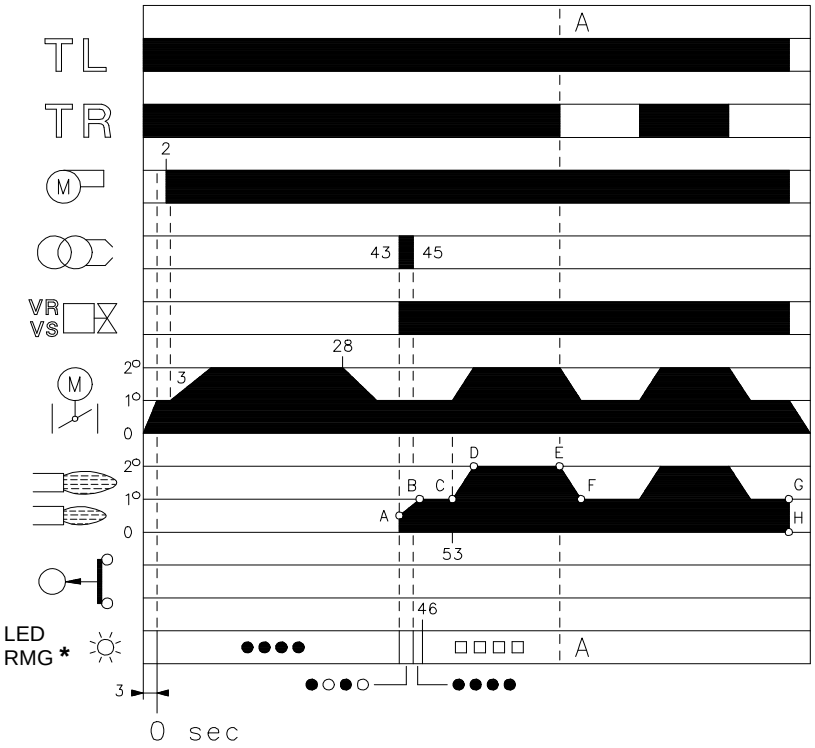

* ○ 灯灭 ● 黄灯 □ 绿灯 ▲ 红灯
详见第 17 页。

(A) D3028

点火失败

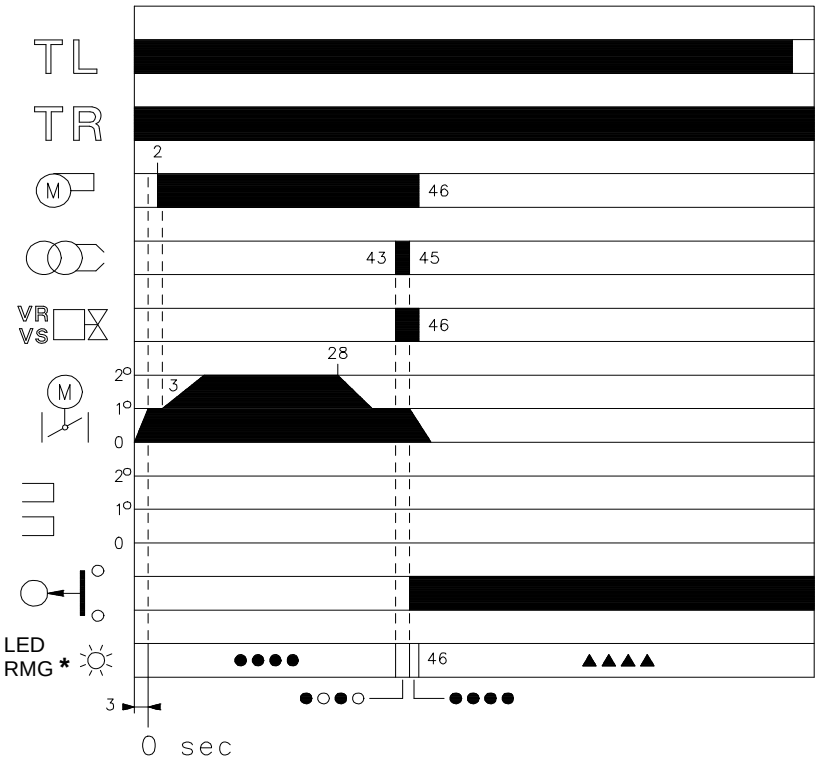

* ○ 灯灭 ● 黄灯 ▲ 红灯
详见第 17 页。

(B) D3029

燃烧器运行

燃烧器启动 **(A)**

- ：远程控制装置 TL 闭合。
  伺服电机启动：伺服电机旋转，开启至凸轮 St 0 上所设定之角度。
  时间大约 3 秒；
- 0 秒 ：控制盒启动阶段开始。
- 2 秒 ：风机启动。
- 3 秒 ：伺服电机启动：伺服电机旋转，直至触发凸轮 St2 上的接触器。
  此时，风门挡板调整至 2 段火出力位置。
  预吹扫时以大火时的风量吹扫。
  吹扫时间为 25 秒。
- 28 秒 ：伺服电机启动：伺服电机旋转，闭合至凸轮 St1 上所设定之角度。
- 43 秒 ：此时风门挡板和燃气蝶阀处于1段火出力位置。
  点火电极产生火花。
  安全阀 VS 和调节阀 VR (快速开启) 开启。火焰在低出力水平（A 点）时点燃。之后，随着阀门缓慢开启至 1 段火出力位置（B 点）时，燃烧器的出力水平也随之逐渐平稳增加。
- 45 秒 ：火花熄灭。
- 53 秒 ：如果远程控制装置 TR 闭合，或已被短接，则伺服电机将继续旋转直至凸轮 St2 设定角度，以将风挡和燃气蝶阀调整至 2 段火运行位置，即 C-D 部分。
  控制盒启动阶段结束。

稳定运行 **(A)**

安装有远程控制装置 **TR** 的系统
启动周期结束后，伺服电机转由控制装置 TR 来控制，TR 控制锅炉温度及压力， D 点。
(但控制盒会继续检测火焰状态以及空气压力开关位置是否正确)。

- 如果温度或压力升高至控制装置TR断开，伺服电机关小燃气蝶阀及风门挡板，燃烧器由 2 段火转为 1 段火运行， E-F 部分。
- 如果温度或压力降低至控制装置TR闭合，伺服电机开大燃气蝶阀及风门挡板，燃烧器由 1 段火转为 2 段火运行。此过程会循环往复。
- 1 段火运行时，G - H 部分，如热量需求小于燃烧器所输送的热量，燃烧器停止运行。在此情况下，远程控制装置 TL 断开，伺服电机回复到凸轮 St0 所设定的角度 0°。 风门挡板完全关闭以将热量损失降至最低。

未安装 **TR** 的系统 **(** 装有桥接器 **)**
燃烧器会按以上所述被点燃。如果温度或压力升高至控制装置 TL 断开，则燃烧器关闭 (如图 A-A 所示)。

点火失败 **(B)**

如果燃烧器点火失败，会在燃气电磁阀开启 3 秒内且在控制装置 TL 闭合 49 秒后内锁定。控制盒红色指示灯将会亮起。

燃烧器运行时火焰熄灭

如果燃烧器运行时，火焰突然熄灭，则燃烧器会在 1 秒内锁定。

最终检查 (燃烧器运行时)：

- 断开最小燃气压力开关的电源线；
- 断开温控器 / 压力开关 TL ；
- 断开温控器 / 压力开关 TS ；

燃烧器必须停机

- 断开最低风压开关的进风管；
- 断开电离探针的电缆；

燃烧器必须停机并锁定。

确保各调节装置上的机械锁紧装置已经锁紧。

维护

⚠ 燃烧器需定期由具有资质的技术人员进行检修，并符合当地的强制性规范。

⚠ 定期检修可保证燃烧器的良好性能，避免过度消耗燃料及增加污染物的排放。

⚠ 在进行任何清洗或操作之前，请先切断燃烧器系统主开关的电源。

燃烧

燃烧器的最优校准需要烟气分析仪。如果任何参数与之前测量数值出入较大，则需在维护时特别注意这些参数的校准。

燃气泄漏检测

确认燃气表和燃烧器之间的连接管路没有燃气泄漏。

燃气过滤器

过滤器脏时请清洁或更换（ 详见燃气阀组安装指南部分 ）。

燃烧头

打开燃烧器，确认燃烧头所有部件状态良好，没有出现因高温变形或有污物附着其上等情况，且燃烧头位置正确。如有疑问，拆开弯头查看。

伺服电机

将带刻度槽的螺钉 2)(A) 页 12 旋转 90°，脱开凸轮 4)(A) 页 12，用手前后转动凸轮，确认其转动平滑。重新连接凸轮 4) 页 12。

燃烧器

检查以确认控制风门挡板及燃气蝶阀的系统是否有使用过度或螺丝松动的情况。同时确认固定燃烧器接线端子板电气导线的各螺丝没有任何松动。

清洁燃烧器外部，清洁时需特别注意传送接头和凸轮 4)(A) 页 12。

燃烧

如果在燃烧器运行的初始阶段获得的燃烧数据不符合当地强制标准，或者在任意出力下燃烧效果不好，则需调整燃烧器。

用卡片记录新产生的燃烧数据，可作为之后对燃烧器进行维护调试的参考信息。

打开燃烧器

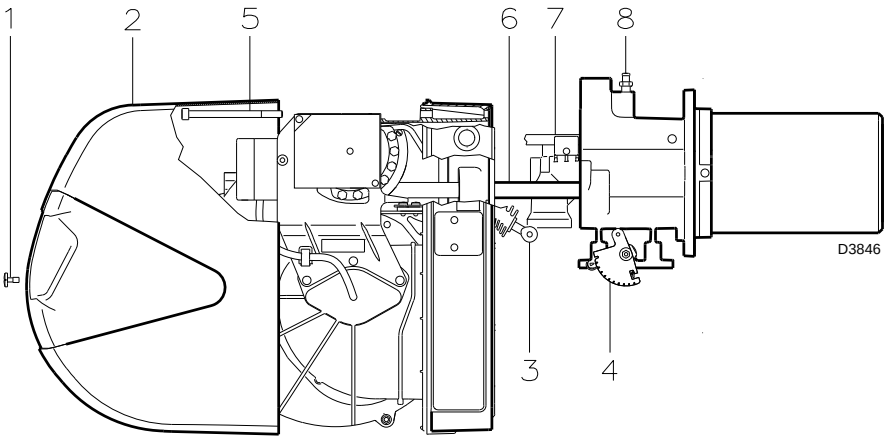

(A)

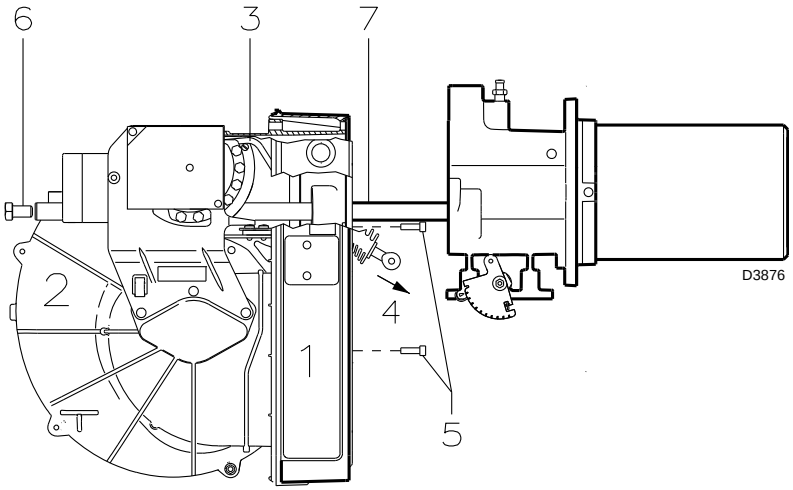

(B)

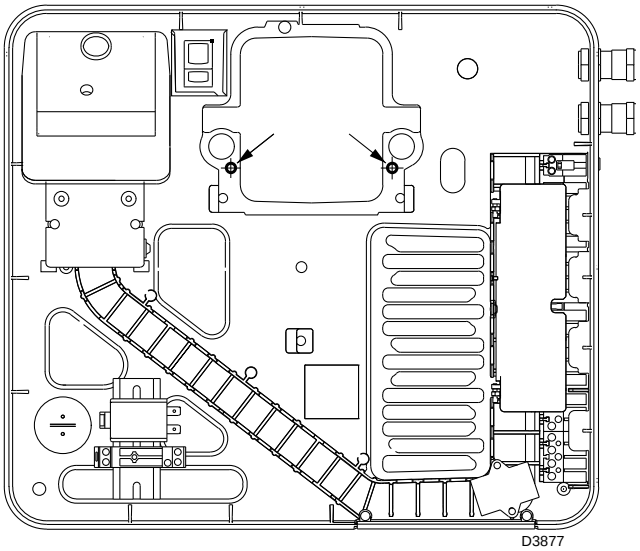

(C)

打开燃烧器 **(A):**

- 切断电源。
- 拆下螺栓 1)，同时 取下保护盖 2)。
- 从刻度指示盘 4) 处解开连杆 3) 的连接。
- 如果燃烧器配有加长燃烧头，则取下螺丝 5)，沿滑杆 6) 将燃烧器拉出约 100 mm。断开电缆，然后将整个燃烧器拉出。

取下螺丝 8) 后，可接着取下燃气头内部组件 7)。
取下螺丝 2)(C) 页 7，分别拧紧两个加长部分 25)(A) 页 4。
将加长部分末端的两个螺丝 2)(C) 页 7 重新拧紧。

> ⚠ 特别注意
> 随后进行燃烧头内部部件的安装时，用 **4 ~ 6 Nm** 规格的扳手将螺丝 8)(A) 拧紧。

关闭燃烧器 **(A):**

- 从管路接口处将燃烧器推回剩余大约 100 mm
- 重新连接电极导线，并在燃烧器内将其拉紧。
- 重新拧紧螺丝 5)，将探针和电极导线向外轻轻拉紧。
- 重新连接连杆 3) 到刻度指示盘 4)。
- 使用加长燃烧头的燃烧器，拆掉加长部分然后对固定在安置位置上；再将螺丝 2)(C) 页 7 与滑杆拧紧。
- 将保护盖 2) 归位，并拧紧螺丝 1)。

配电盘的维护

如需检修配电盘 1)(B)，可以先取下风机组件 2)(B)，以方便对电气元件进行维修操作。
如图 (A) 所示，打开燃烧器时，解开连接杆 3)(B)，取下可变轮廓凸轮上的螺丝，将其从顶端 4)(B)处取下。
断开与空气压力开关、伺服电机以及风机相连的电缆。
取下保护垫上的 3 个螺丝 5)(B) 。
取下另外 2 个螺丝 6)(B)，沿滑杆 7)(B) 中取出风机组件 2)(B)。
最后，可以使用 3 个螺丝中的其中 2 个 5)(B)，按图 (C) 所示的位置将配电盘与管路接口处连接，之后可进行维修操作。

燃烧器启动阶段故障诊断

启动过程中的各种指示见下表：

颜色代码表	
启动程序	颜色代码
预吹扫	●●●●●●●●●
点火阶段	●○●○●○●○●
运行，火焰正常	□□□□□□□□□
运行，火焰较弱	□○□○□○□○□
电压低于 ~ 170V	●▲●▲●▲●▲●
锁定	▲▲▲▲▲▲▲▲▲
外部光源	▲□▲□▲□▲□▲
图例： ○ 灯灭 ● 黄灯 □ 绿灯 ▲ 红灯	

复位控制盒及执行故障诊断

控制盒具有故障诊断功能，因此能很容易确定故障原因（ 指示器：红色 **LED** 指示灯 ）。

要使用这一功能，须等进入安全保护状态（ 锁定状态 ）至少 10 秒之后再按复位按钮。

控制盒发出一组闪烁信号 (每间隔 1 秒)，该组闪烁会以 3 秒间隔不断重复出现。

可根据指示灯的闪烁次数来判断可能的故障原因，系统复位时必须按住按钮 1-3 秒。

间隔	红色 **LED** 指示灯亮 等待至少 **10** 秒	锁定	按下复位按钮 时间大于 **3** 秒	闪烁信号	间隔 **3** 秒	闪烁信号
				● ● ● ● ●		● ● ● ● ●

以下方法可用来复位控制盒及执行故障诊断。

复位控制盒

复位控制盒程序如下：

- 按住复位按钮 1-3 秒。
  松开复位按钮 2 秒后燃烧器重启。
  若温度限位开关处于断开状态，则燃烧器不能重启。

视觉诊断

提示引起燃烧器锁定的故障类型。

查看故障诊断，并按以下步骤操作：

- 当红色 LED 持续亮起（燃烧器锁定）时，按住按钮超过 3 秒。
  黄灯闪烁说明操作成功。
  指示灯闪烁则松开按钮。指示灯闪烁次数提示故障原因，如第 18 页列表所示。

软件诊断

通过与 PC 连接，报告燃烧器使用寿命，提示运行时间、 锁定次数及类型、控制盒序列号等 . . . . . .

查看故障诊断，并按以下步骤操作：

- 当红色 LED 持续亮起（燃烧器锁定）时，按住按钮超过 3 秒。
  黄灯闪烁说明操作成功。
  松开按钮 1 秒之后再次按下按钮超过 3 秒直至黄灯再次闪烁。
  松开按钮，红色 LED 高频闪烁：此时光链路被激活。

一旦操作成功，必须按照上述控制盒复位程序将控制盒恢复初始状态。

按键时间	控制盒状态
1 – 3 秒	在视觉诊断前复位控制盒。
大于 3 秒	在锁定状态进行视觉诊断： (Led 指示灯以 1 秒间隔闪烁)。
开始视觉诊断后超过 3 秒	通过光链路与 PC 连接进行软件诊断 (可查看运行时间、故障等)

控制盒指示灯闪烁情况提示故障类型，如第 18 页列表所示。

指示灯	故障	可能的故障原因	排除故障建议
闪烁 2 次 ● ●	预吹扫及安全时间过后，燃烧器未产生火焰进入锁定状态	1 - 电磁阀通过燃气量过小	增大
		2 - 两个电磁阀中的一个未开启	更换
		3 - 燃气压力过低	增大压力
		4 - 点火电极调整不当	调整，见图 (D) 页 7
		5 - 由于绝缘损坏导致电极接地	更换
		6 - 高压电缆故障	更换
		7 - 由于高温导致高压电缆变形	更换或保护
		8 - 点火变压器故障	更换
		9 - 电磁阀组或点火变压器电气连接错误	检查
		10 - 控制盒故障	更换
		11 - 燃气阀组前手动阀关闭	开启
		12 - 燃气管路中有空气	排净空气
		13 - 燃气阀组未接线或电磁线圈故障	检查连接或更换线圈
闪烁 3 次 ● ● ●	燃烧器启动前出现锁定	14 - 空气压力开关处于运行位置	调整或更换
	燃烧器启动后因锁定停机	- 由于没有足够的空气压力导致空气压力开关失效：	
		15 - 空气压力开关调整不当	调整或更换
		16 - 压力开关的压力测试点处的管路堵塞	清洁
		17 - 燃烧头调整不当	调整
		18 - 炉膛背压过高	空气压力开关连接到风机进风口
	在预吹扫阶段锁定	19 - 电机控制接触器故障 (只用三相)	更换
		20 - 电机故障	更换
		21 - 电机锁定 (电机故障)	更换
闪烁 4 次 ● ● ● ●	燃烧器启动后因锁定停机	22 - 虚假火焰	更换控制盒
	燃烧器停机时锁定	23 - 燃烧头处持续火焰或虚假火焰	消除持久性的火焰或更换控制盒
闪烁 6 次 ● ● ● ● ● ●	燃烧器启动后因锁定停机	24 - 伺服电机故障或调整不当	调整或更换
闪烁 7 次 ● ● ● ● ● ● ●	燃烧器出现火焰后立即锁定	25 - 电磁阀通过燃气量过小	增加
		26 - 探针电极调整不当	调整，见图 (D) 页 7
		27 - 电离不足 (小于 5 μ A)	检查调整位置
		28 - 探针接地	撤回或更换电缆
		29 - 燃烧器接地不良	检查接地
		30 - 零线 – 火线 接反	更正
		31 - 火焰检测电路故障	更换控制盒
	燃烧器在 1 段火和 2 段火之间转换时燃烧器锁定。	32 - 空气过多或燃气过少	调整空气及燃气
	燃烧器运行时锁定	33 - 探头或电离电缆接地	更换磨损零部件
闪烁 10 次 ● ● ● ● ● ● ● ● ● ●	燃烧器启动前出现锁定	34 - 电气连接错误	检查
	燃烧器锁定	35 - 控制盒故障	更换
		36 - 温控器接线处存在电磁干扰	过滤或去除
		37 - 存在电磁干扰	使用抗电磁干扰保护组件
不闪烁	燃烧器未启动	38 - 电源没电	闭合所有开关 – 检查所有连接
		39 - 限制器或安全控制装置断开	调整或更换
		40 - 线路保险丝熔断	更换
		41 - 控制盒故障	更换
		42 - 没有燃气供应	打开阀组之前的手动阀
		43 - 管道内燃气压力不足	联系燃气公司
		44 - 最小燃气压力开关断开	调整或更换
		45 - 伺服电机未运转至最小点火位置	更换
	燃烧器不断重复启动周期，未出现锁定	46 – 燃气管路中的燃气压力接近最小燃气压力开关的设定值。阀门开启后，压力突然下降会造成暂时性的压力开关自动断开，阀门立即关闭，导致燃烧器停机。 压力增大后，压力开关再次闭合，点火周期重复。以此类推。	降低最小燃气压力开关设定压力。 更换燃气过滤器滤芯。
	点火脉冲	47 - 燃烧头调整调整不当	调整燃烧头，见第 8 页
		48 - 点火电极调整不当	调整，见图 (D) 页 7
		49 - 风门挡板调整不当：风量过大	调整风门挡板
		50 - 点火阶段出力过大	降低出力
	燃烧器不能进入 2 段火运行	51 - 远程控制装置 TR 断开	调整或更换
		52 - 控制盒故障	更换
		53 - 伺服电机故障	更换
	风门挡板开启时燃烧器停机	54 - 风机电机故障	更换

正常运行 / 火焰检查时间

控制盒的另一项功能是保证燃烧器的正常运行 (指示灯：绿色 **LED** 常亮)。
要使用此项功能，需从燃烧器点着火开始至少等待 10 秒，然后按下控制盒按钮保持至少 3 秒。
松开按钮，绿色 LED 开始闪烁，闪烁次数如下表

绿色 **LED** 指示灯亮 等待至少 **10** 秒	按下按钮 时间大于 **3** 秒	指示灯闪烁	间隔 **3** 秒	指示灯闪烁
		● ● ● ● ● ●		● ● ● ● ● ●

每组 LED 灯闪烁间隔大约为 3 秒。
根据下表，从阀门开启时算起，以每组灯的闪烁次数来计算探针检测到火焰的时间。

指示灯	检测到火焰的时间
闪烁 1 次 ●	0.4 秒
闪烁 2 次 ● ●	0.8 秒
闪烁 6 次 ● ● ● ● ● ●	2.8 秒

每次燃烧器启动时都会更新数据。
一旦读取数据，通过简单的按下控制盒按钮，燃烧器可重新进入启动周期。
警告
如果时间超过 2 秒，会出现点火延迟。
检查燃气阀组液压慢开装置、风门挡板及燃烧头的调整。

连接到 **PC** 机的界面适配器组件 **RMG** 编码 **3002719**

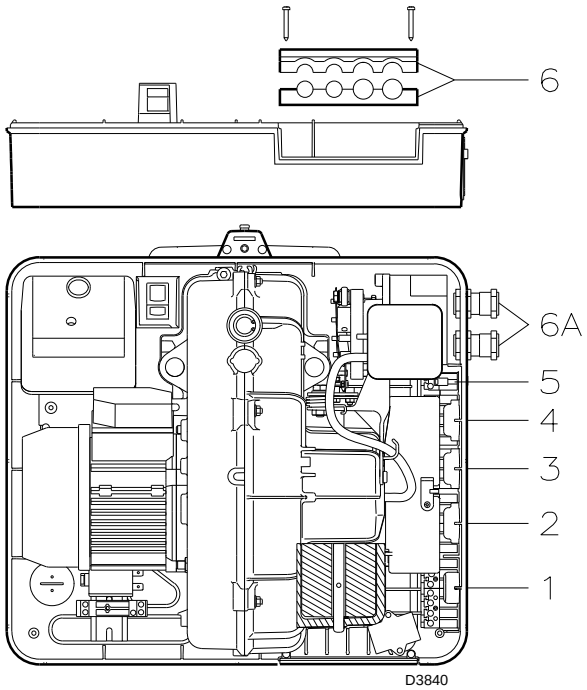

电气连接

注意

电气接线必须符合该国的强制性法规，且必须由具有相关资质的人员执行。
擅自修改接线或不按接线图接线所造成的损失，意大利利雅路股份有限公司概不负责。

使用符合 EN 60 335-1 标准的柔性电缆。

所有连接到燃烧器的电缆必须穿过导缆孔。

导缆孔可以有不同的用法；下面是其中一种模式：

RS 34-44 MZ 单相
1- 7 孔插座 单相供电，温度 / 压力开关 TL
2- 燃气阀组、燃气压力开关或燃气泄漏检测装置的 6 孔插座
3- 4 孔插座 温度 / 压力开关 TR
4- 5 孔插座，未使用
5- 2 孔插座 最小燃气压力开关配件
6 - 6A 穿线管用
(如使用 6A 孔，需要捅破)

RS 44 MZ 三相
1-7 孔插座 单相供电，温度 / 压力开关 TL
2- 燃气阀门、燃气压力开关或燃气泄漏检测装置的 6 孔插座
3- 4 孔插座 温度 / 压力开关 TR
4- 5 孔插座 三相电源
5- 2 孔插座 最小燃气压力开关配件
6 - 6A 穿线管用
(如使用 6A 孔，需要捅破)

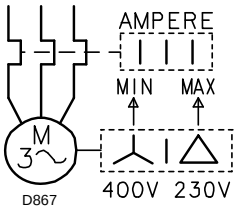

热继电器校准 **(RS 44 MZ** 三相 **)**

此操作系为避免由于掉相引起输入电流急剧增大而烧毁电机。
- 如果电机为星形驱动，电压 **400 V**，指示标必须位于 “MIN”。
- 如果电机为角形连接，电压 **230 V**，指示标必须位于 “MAX”。

即使电机在电压 400 V 时的额定输入功率超出热继电器的量程，电气保护在任何情况下仍会发挥作用。

注意事项

- RS 44 MZ 三相机型出厂时设置为使用 **400V** 电源。如果使用 **230 V** 电源，将电机连接由星形改为角形，同时改变热继电器的设置。
- RS 34 -44 MZ 机型的燃烧器只能间歇运行，即燃烧器必须每 24 小时停机一次来检测控制盒在启动循环中的有效性。正常情况下，锅炉的温度 / 压力限位开关 TL 会保证燃烧器的停机。如果不能实现，则需在燃烧器上串接一个计时开关来实现燃烧器至少每 24 小时停机一次。
- RS 34-44 MZ 型燃烧器出厂时具备两段火功能，因此必须连接温度 / 压力开关 TR。若要改成单段火运行，在温度 / 压力开关 TR 的位置，在插头 X4 的接线端子 T6–T8 之间插入一个短接线。

警告：
- 不要把零线和相线反接。任何反接可能造成点火失败，燃烧器锁定。
- 所有损坏部件的更换必须使用原厂配件。

Electrical panel layout - 电气接线图

1		**INDEX - 目录**
2		Indication of references - 参考指示
3	**RS 34 MZ** **RS 44 MZ**	Functional layout - 功能图
4	**RS 34 MZ** **RS 44 MZ**	Functional layout - 功能图
5	**RS 34 MZ** **RS 44 MZ**	Electrical wiring is the responsibility of the installation engineer - 安装方负责的电气接线

2 **Indication of references - 参考指示**

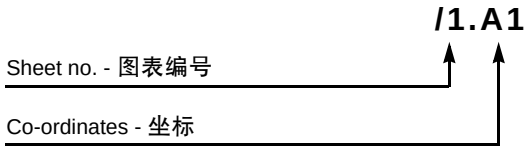

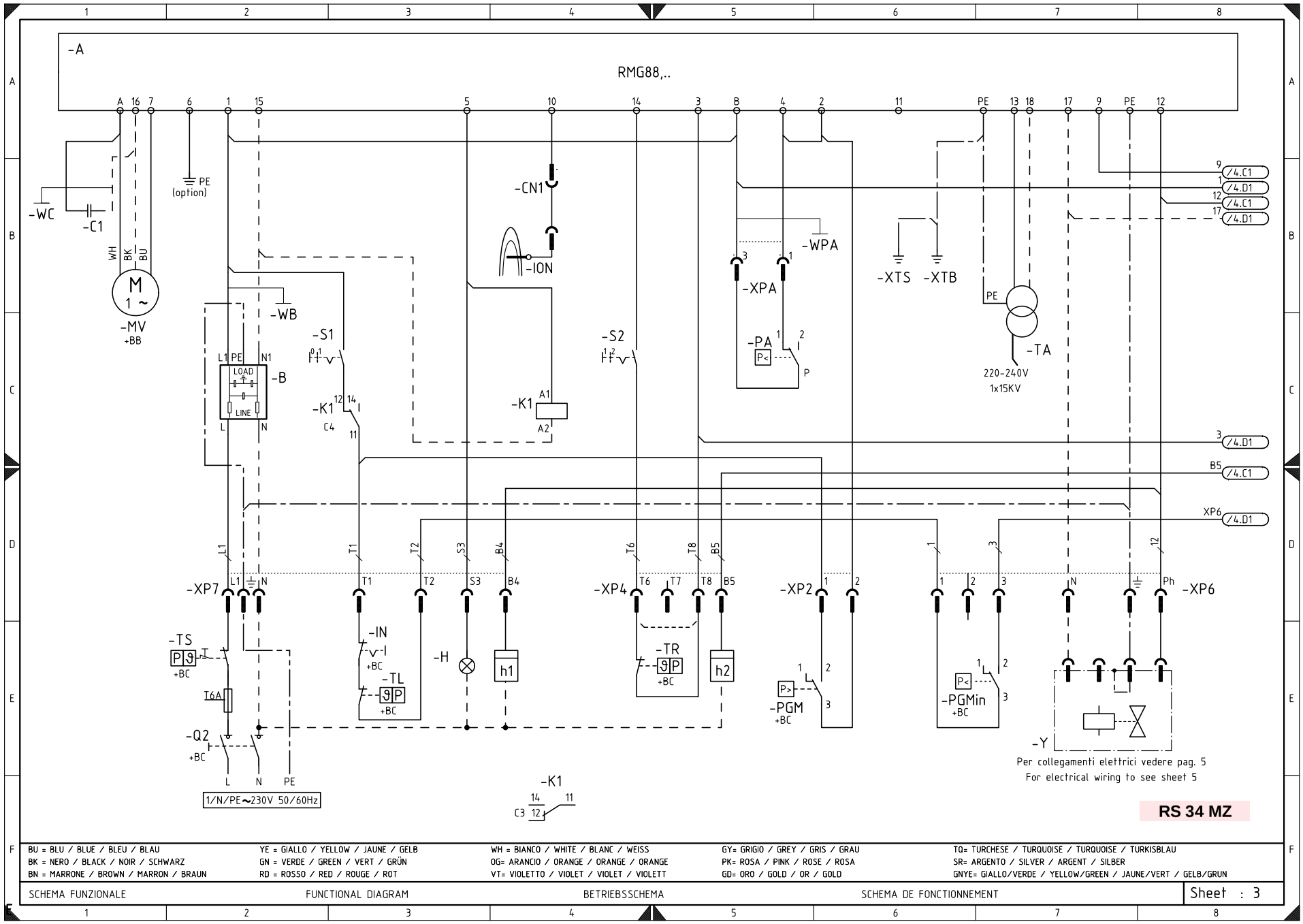
-A
RMG88,..
-WC
-C1
PE (option)
-MV
+BB
-WB
-B
-S1
-K1
C4
-CN1
-ION
-S2
-WPA
-XPA
-PA
-XTS
-XTB
-TA
220-240V
1x15KV
-XP7
-XP4
-XP2
-XP6
-TS
T6A
-Q2
+BC
-IN
-TL
-H
h1
-TR
h2
-PGM
-PGMin
-Y
1/N/PE~230V 50/60Hz
Per collegamenti elettrici vedere pag. 5
For electrical wiring to see sheet 5
RS 34 MZ
BU = BLU / BLUE / BLEU / BLAU
BK = NERO / BLACK / NOIR / SCHWARZ
BN = MARRONE / BROWN / MARRON / BRAUN
YE = GIALLO / YELLOW / JAUNE / GELB
GN = VERDE / GREEN / VERT / GRÜN
RD = ROSSO / RED / ROUGE / ROT
WH = BIANCO / WHITE / BLANC / WEISS
OG= ARANCIO / ORANGE / ORANGE / ORANGE
VT= VIOLETTO / VIOLET / VIOLET / VIOLETT
GY= GRIGIO / GREY / GRIS / GRAU
PK= ROSA / PINK / ROSE / ROSA
GD= ORO / GOLD / OR / GOLD
TQ= TURCHESE / TURQUOISE / TURQUOISE / TURKISBLAU
SR= ARGENTO / SILVER / ARGENT / SILBER
GNYE= GIALLO/VERDE / YELLOW/GREEN / JAUNE/VERT / GELB/GRUN
SCHEMA FUNZIONALE
FUNCTIONAL DIAGRAM
BETRIEBSSCHEMA
SCHEMA DE FONCTIONNEMENT
Sheet : 3

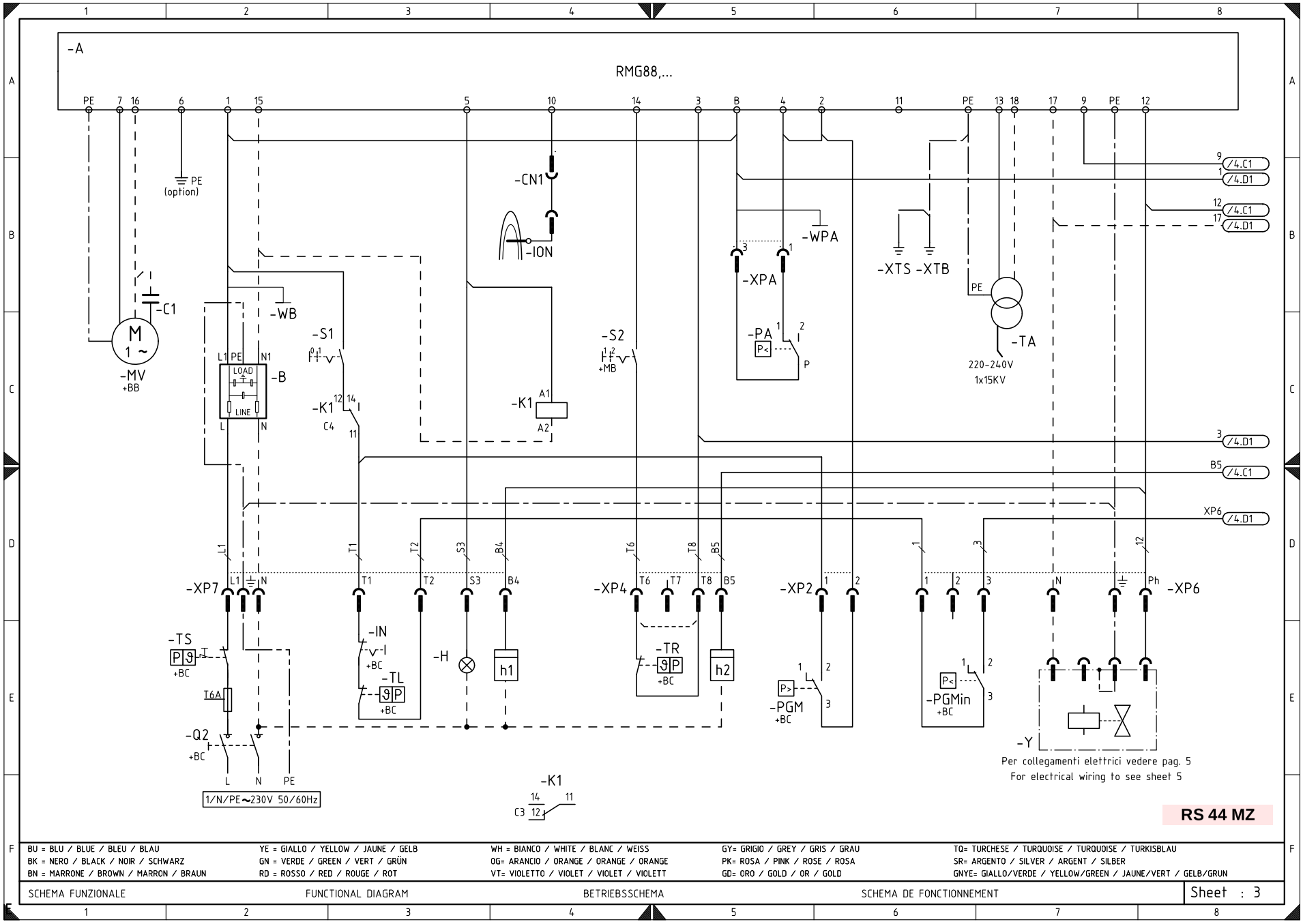
-A
RMG88,...
PE 7 16 6 1 15 5 10 14 3 B 4 2 11 PE 13 18 17 9 PE 12
PE (option)
-C1
M 1 ~
-MV
+BB
-WB
L1 PE N1
LOAD
-B
LINE
L N
-S1
-K1
C4
-CN1
-ION
-K1
A1
A2
-S2
+MB
-WPA
-XPA
-PA
P<
P
-XTS -XTB
PE
-TA
220-240V
1x15KV
9 /4.C1
1 /4.D1
12 /4.C1
17 /4.D1
3 /4.D1
B5 /4.C1
XP6 /4.D1
L1 T1 T2 S3 B4 T6 T8 B5 1 3 12
-XP7 L1 N T1 T2 S3 B4 -XP4 T6 T7 T8 B5 -XP2 1 2 1 2 3 N Ph -XP6
-TS
P 9
+BC
T6A
-Q2
+BC
L N PE
1/N/PE~230V 50/60Hz
-IN
+BC
-TL
9 P
+BC
-H
h1
-TR
9 P
+BC
h2
P>
-PGM
+BC
P<
-PGMin
+BC
-Y
-K1
14 11
C3 12
Per collegamenti elettrici vedere pag. 5
For electrical wiring to see sheet 5
RS 44 MZ
BU = BLU / BLUE / BLEU / BLAU
BK = NERO / BLACK / NOIR / SCHWARZ
BN = MARRONE / BROWN / MARRON / BRAUN
YE = GIALLO / YELLOW / JAUNE / GELB
GN = VERDE / GREEN / VERT / GRÜN
RD = ROSSO / RED / ROUGE / ROT
WH = BIANCO / WHITE / BLANC / WEISS
OG= ARANCIO / ORANGE / ORANGE / ORANGE
VT= VIOLETTO / VIOLET / VIOLET / VIOLETT
GY= GRIGIO / GREY / GRIS / GRAU
PK= ROSA / PINK / ROSE / ROSA
GD= ORO / GOLD / OR / GOLD
TQ= TURCHESE / TURQUOISE / TURQUOISE / TURKISBLAU
SR= ARGENTO / SILVER / ARGENT / SILBER
GNYE= GIALLO/VERDE / YELLOW/GREEN / JAUNE/VERT / GELB/GRUN
SCHEMA FUNZIONALE
FUNCTIONAL DIAGRAM
BETRIEBSSCHEMA
SCHEMA DE FONCTIONNEMENT
Sheet : 3

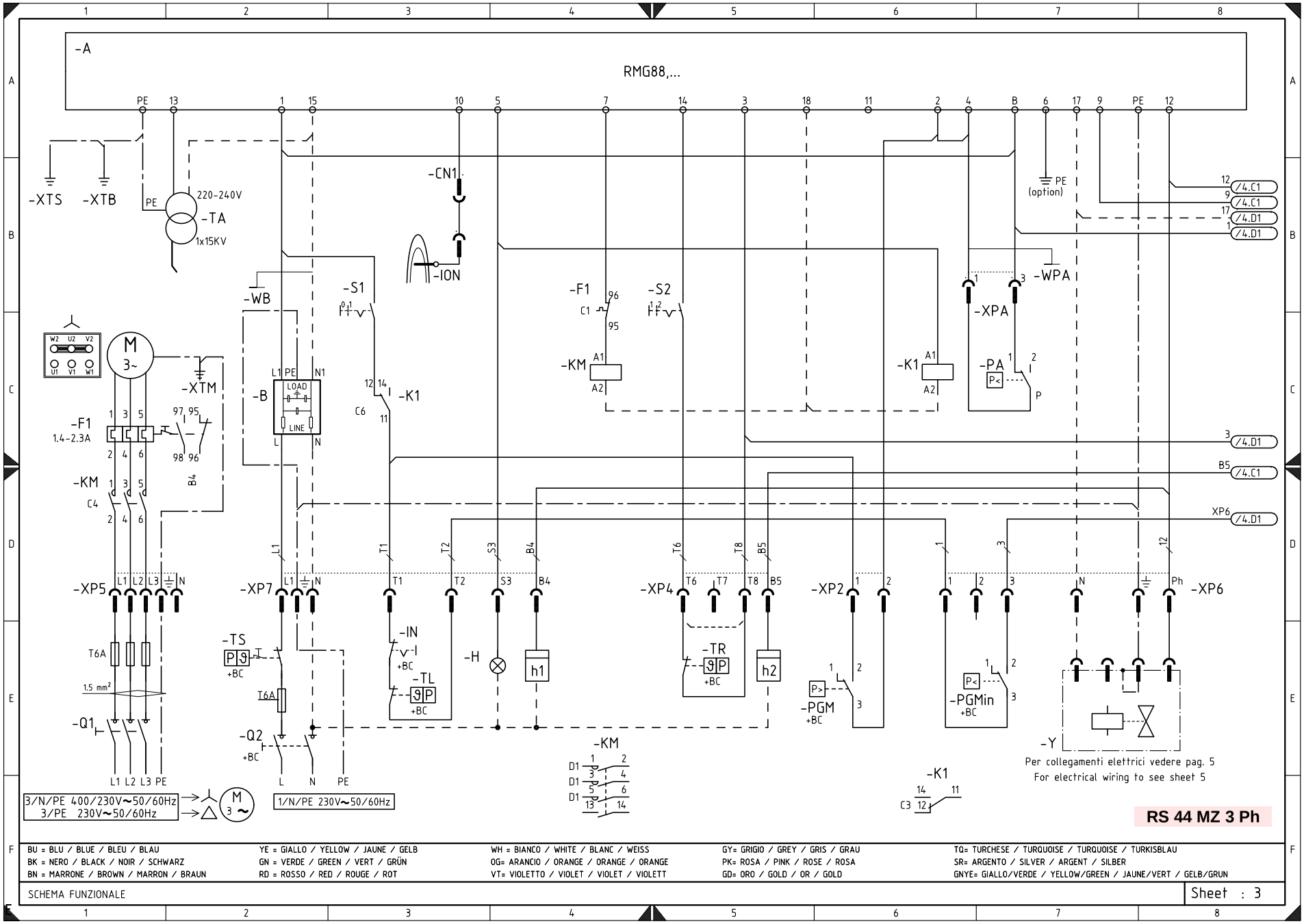
-A
RMG88,...
-XTS
-XTB
-TA
220-240V
1x15KV
-CN1
-ION
-WB
-S1
-F1
-S2
-KM
-K1
-WPA
-XPA
-PA
-B
-XTM
-F1
1.4-2.3A
-KM
-XP5
-XP7
-XP4
-XP2
-XP6
-TS
-IN
-TL
-H
-TR
-PGM
-PGMin
-Y
-Q1
-Q2
T6A
1.5 mm²
3/N/PE 400/230V~50/60Hz
3/PE 230V~50/60Hz
1/N/PE 230V~50/60Hz
Per collegamenti elettrici vedere pag. 5
For electrical wiring to see sheet 5
RS 44 MZ 3 Ph
BU = BLU / BLUE / BLEU / BLAU
BK = NERO / BLACK / NOIR / SCHWARZ
BN = MARRONE / BROWN / MARRON / BRAUN
YE = GIALLO / YELLOW / JAUNE / GELB
GN = VERDE / GREEN / VERT / GRÜN
RD = ROSSO / RED / ROUGE / ROT
WH = BIANCO / WHITE / BLANC / WEISS
OG= ARANCIO / ORANGE / ORANGE / ORANGE
VT= VIOLETTO / VIOLET / VIOLET / VIOLETT
GY= GRIGIO / GREY / GRIS / GRAU
PK= ROSA / PINK / ROSE / ROSA
GD= ORO / GOLD / OR / GOLD
TQ= TURCHESE / TURQUOISE / TURQUOISE / TURKISBLAU
SR= ARGENTO / SILVER / ARGENT / SILBER
GNYE= GIALLO/VERDE / YELLOW/GREEN / JAUNE/VERT / GELB/GRUN
SCHEMA FUNZIONALE
Sheet : 3

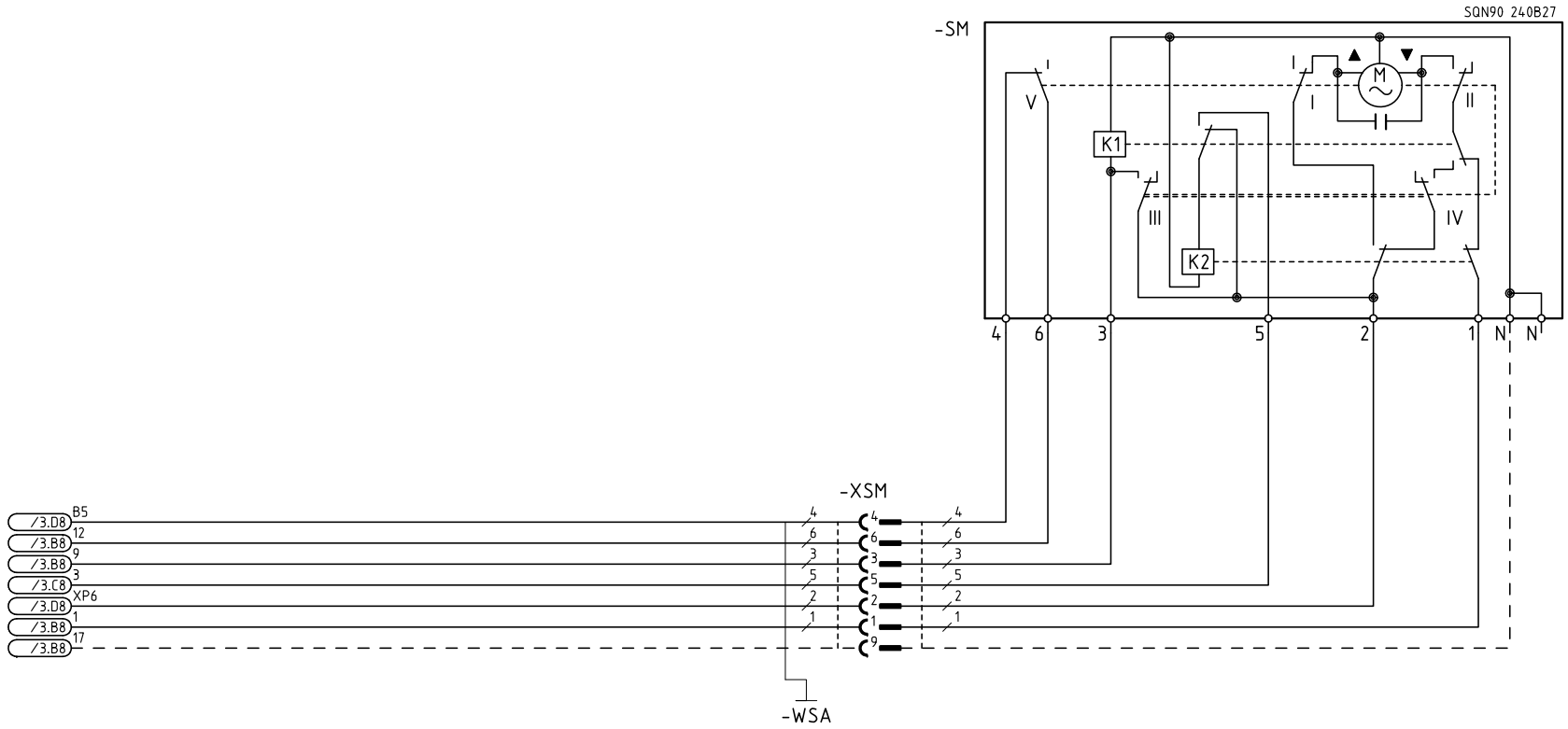

BU = BLU / BLUE / BLEU / BLAU	YE = GIALLO / YELLOW / JAUNE / GELB	WH = BIANCO / WHITE / BLANC / WEISS	GY= GRIGIO / GREY / GRIS / GRAU	TQ= TURCHESE / TURQUOISE / TURQUOISE / TURKISBLAU
BK = NERO / BLACK / NOIR / SCHWARZ	GN = VERDE / GREEN / VERT / GRÜN	OG= ARANCIO / ORANGE / ORANGE / ORANGE	PK= ROSA / PINK / ROSE / ROSA	SR= ARGENTO / SILVER / ARGENT / SILBER
BN = MARRONE / BROWN / MARRON / BRAUN	RD = ROSSO / RED / ROUGE / ROT	VT= VIOLETTO / VIOLET / VIOLET / VIOLETT	GD= ORO / GOLD / OR / GOLD	GNYE= GIALLO/VERDE / YELLOW/GREEN / JAUNE/VERT / GELB/GRUN

SCHEMA FUNZIONALE

Sheet : 4

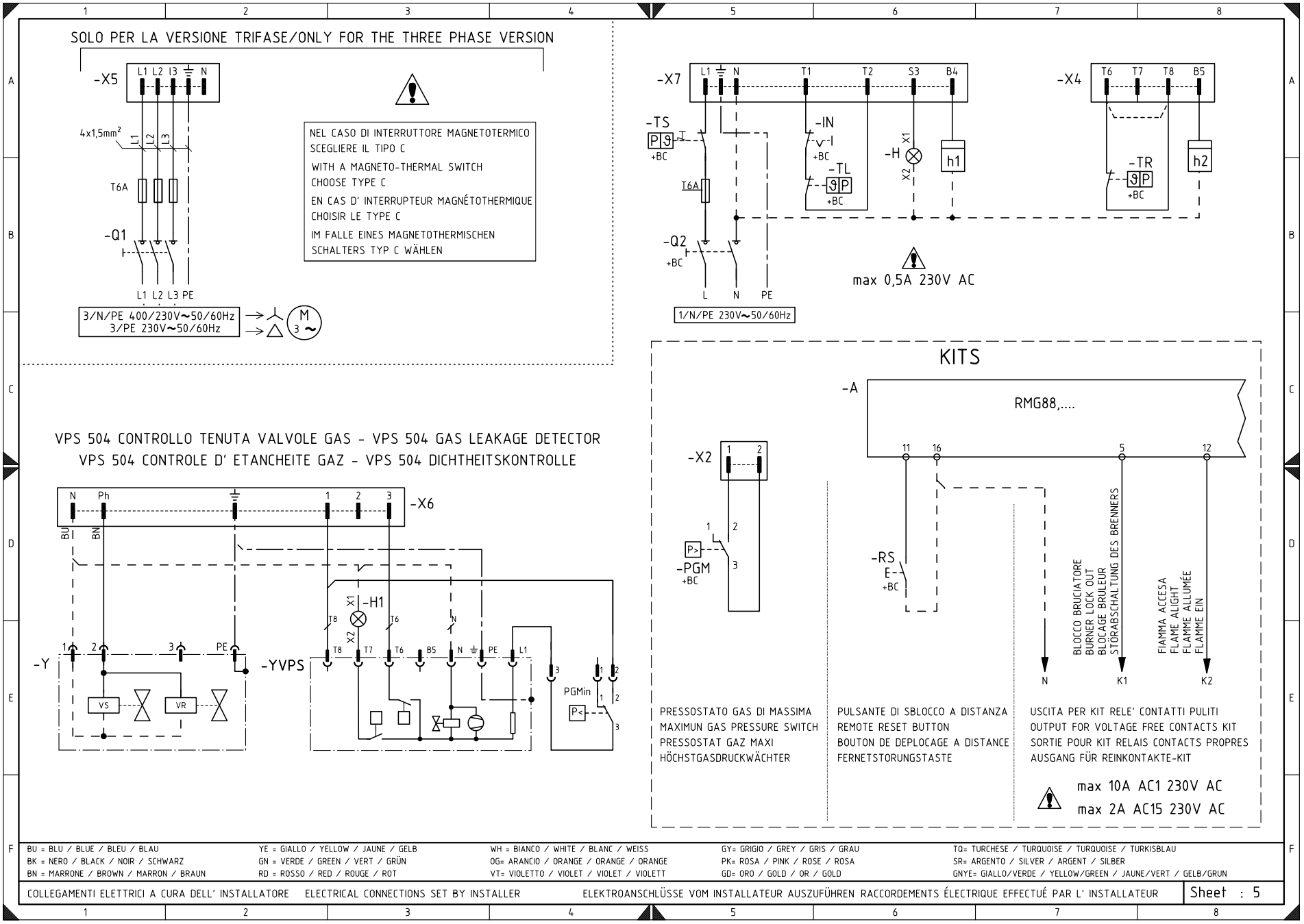
SOLO PER LA VERSIONE TRIFASE/ONLY FOR THE THREE PHASE VERSION
-X5
L1 L2 L3 N
4x1,5mm²
T6A
-Q1
L1 L2 L3 PE
3/N/PE 400/230V~50/60Hz
3/PE 230V~50/60Hz
M 3~
NEL CASO DI INTERRUTTORE MAGNETOTERMICO SCEGLIERE IL TIPO C
WITH A MAGNETO-THERMAL SWITCH CHOOSE TYPE C
EN CAS D' INTERRUPTEUR MAGNÉTOTHERMIQUE CHOISIR LE TYPE C
IM FALLE EINES MAGNETOTHERMISCHEN SCHALTERS TYP C WÄHLEN
-X7
L1 N T1 T2 S3 B4
-TS
+BC
T6A
-Q2
+BC
L N PE
1/N/PE 230V~50/60Hz
-IN
+BC
-TL
+BC
-H
X1
X2
h1
max 0,5A 230V AC
-X4
T6 T7 T8 B5
-TR
+BC
h2
VPS 504 CONTROLLO TENUTA VALVOLE GAS - VPS 504 GAS LEAKAGE DETECTOR
VPS 504 CONTROLE D' ETANCHEITE GAZ - VPS 504 DICHTHEITSKONTROLLE
N Ph 1 2 3 -X6
BU BN
-Y
1 2 3 PE
VS VR
-YVPS
-H1
X1 X2
T8 T7 T6 B5 N PE L1
PGMin
P<
KITS
-A
RMG88,....
11 16 5 12
-X2
1 2
-PGM
+BC
-RS
+BC
N K1 K2
BLOCCO BRUCIATORE
BURNER LOCK OUT
BLOCAGE BRULEUR
STÖRABSCHALTUNG DES BRENNERS
FIAMMA ACCESA
FLAME ALIGHT
FLAMME ALLUMÉE
FLAMME EIN
PRESSOSTATO GAS DI MASSIMA
MAXIMUN GAS PRESSURE SWITCH
PRESSOSTAT GAZ MAXI
HÖCHSTGASDRUCKWÄCHTER
PULSANTE DI SBLOCCO A DISTANZA
REMOTE RESET BUTTON
BOUTON DE DEPLOCAGE A DISTANCE
FERNETSTORUNGSTASTE
USCITA PER KIT RELE' CONTATTI PULITI
OUTPUT FOR VOLTAGE FREE CONTACTS KIT
SORTIE POUR KIT RELAIS CONTACTS PROPRES
AUSGANG FÜR REINKONTAKTE-KIT
max 10A AC1 230V AC
max 2A AC15 230V AC
BU = BLU / BLUE / BLEU / BLAU
BK = NERO / BLACK / NOIR / SCHWARZ
BN = MARRONE / BROWN / MARRON / BRAUN
YE = GIALLO / YELLOW / JAUNE / GELB
GN = VERDE / GREEN / VERT / GRÜN
RD = ROSSO / RED / ROUGE / ROT
WH = BIANCO / WHITE / BLANC / WEISS
OG= ARANCIO / ORANGE / ORANGE / ORANGE
VT= VIOLETTO / VIOLET / VIOLET / VIOLETT
GY= GRIGIO / GREY / GRIS / GRAU
PK= ROSA / PINK / ROSE / ROSA
GD= ORO / GOLD / OR / GOLD
TQ= TURCHESE / TURQUOISE / TURQUOISE / TURKISBLAU
SR= ARGENTO / SILVER / ARGENT / SILBER
GNYE= GIALLO/VERDE / YELLOW/GREEN / JAUNE/VERT / GELB/GRUN
COLLEGAMENTI ELETTRICI A CURA DELL' INSTALLATORE
ELECTRICAL CONNECTIONS SET BY INSTALLER
ELEKTROANSCHLÜSSE VOM INSTALLATEUR AUSZUFÜHREN
RACCORDEMENTS ÉLECTRIQUE EFFECTUÉ PAR L' INSTALLATEUR
Sheet : 5

KEY TO ELECTRICAL LAYOUT

A	–	Electrical control box
B	–	Radio noise filter
+BB	–	Components on burners
+BC	–	Components on boiler
C1	–	Capacitor
CN1	–	Ionisation probe connector
F1	–	Fan motor thermal relay
H	–	Remote lockout signalling
H1	–	Lockout YVPS
IN	–	Manual burner stop switch
ION	–	Ionisation probe
h1	–	Hour counter
h2	–	Hour counter 2nd stage
K1	–	Relay
KM	–	Motor contact maker
MV	–	Fan motor
PA	–	Air pressure switch
PGM	–	Maximum gas pressure switch
PGMin	–	Low gas pressure switch
Q1	–	Three phase knife switch
Q2	–	Single–phase knife switch
RS	–	Remote reset button
S1	–	Selector: burner off - on
S2	–	Selector: 1st - 2nd stage operation
SM	–	Servomotor
TA	–	Ignition transformer
TL	–	Limit thermostat/pressure switch
TR	–	Adjustment thermostat/pressure switch
TS	–	Safety thermostat/pressure switch
Y	–	Gas regulation valve + gas safety valve
YVPS	–	Gas valve leak detection control device
XPA	–	Air pressure switch connector
XP2	–	Maximum gas pressure switch connector
XP4	–	4-pole socket
XP5	–	5-pole socket
XP6	–	6-pole socket
XP7	–	7-pole socket
XSM	–	Servomotor connector
XTB	–	Shelf earth
XTM	–	Fan assembly earth
XTS	–	Servomotor assembly earth
X2	–	2-pin plug
X4	–	4-pin plug
X5	–	5-pin plug
X6	–	6-pin plug
X7	–	7-pin plug

电气图图例说明

A	–	控制盒
B	–	防止电磁波干扰的滤波器
+BB	–	燃烧器组件
+BC	–	锅炉部件
C1	–	电容
CN1	–	电离探针连接插头
F1	–	风机电机热继电器
H	–	远程锁定指示
H1	–	锁定 YVPS
IN	–	燃烧器手动开关
ION	–	电离探针
h1	–	计时器
h2	–	2 段火计时器
K1	–	继电器
KM	–	电机接触器
MV	–	风机
PA	–	空气压力开关
PGM	–	最大燃气压力开关
PGMin	–	最小燃气压力开关
Q1	–	三相闸刀开关
Q2	–	单相闸刀开关
RS	–	远程复位按钮
S1	–	开关：燃烧器 开－关
S2	–	开关：1 段火 -2 段火
SM	–	伺服电机
TA	–	点火变压器
TL	–	温度／压力限位开关
TR	–	温度／压力调节开关
TS	–	温度／压力安全开关
Y	–	燃气调节阀 + 燃气安全阀
YVPS	–	燃气泄漏检测控制装置
XPA	–	空气压力开关连接插头
XP2	–	最大燃气压力开关连接插头
XP4	–	4 孔插座
XP5	–	5 孔插座
XP6	–	6 孔插座
XP7	–	7 孔插座
XSM	–	伺服电机连接插头
XTB	–	机架接地
XTM	–	风机接地
XTS	–	伺服电机接地
X2	–	2 针插头
X4	–	4 针插头
X5	–	5 针插头
X6	–	6 针插头
X7	–	7 针插头

Registered Office - 公司注册所在地 :
RIELLO S.p.A.
I-37045 Legnago (VR)
Tel.: +39.0442.630111
http:// www.riello.it
http:// www.rielloburners.com

Manufacturing site:
Riello Heating Equipment (Shanghai) CO., LTD
No. 388, Jinbai Road - Jinshan Industrial Zone
201506 - Shanghai
CHINA

生产场所 :
Riello Heating Equipment (Shanghai) CO., LTD
利雅路热能设备（上海）有限公司
上海市金山工业区金百路 388 号