Installation, use and maintenance instructions
安装 , 使用以及维护说明书

RIELLO

GB **Light oil burner**

CN **轻油燃烧器**

One stage operation
一段火运行

CE

RIELLO 40

CODE - 编码	MODEL - 型号	TYPE - 类型
20013629	**G3MC**	**448T1**

20013749 (3) - 04/2011

INFORMATION ABOUT THE INSTRUCTION MANUAL

INTRODUCTION

The instruction manual supplied with the burner:

- is an integral and essential part of the product and must not be separated from it; it must therefore be kept carefully for any necessary consultation and must accompany the burner even if it is transferred to another owner or user, or to another system. If the manual is lost or damaged, another copy must be requested from the Technical Assistance Service RIELLO of the area;
- is designed for use by qualified personnel;
- offers important indications and instructions relating to the installation safety, start-up, use and maintenance of the burner.

DELIVERY OF THE SYSTEM AND THE INSTRUCTION MANUAL

When the system is delivered, it is important that:

- The instruction manual is supplied to the user by the system manufacturer, with the recommendation to keep it in the room where the heat generator is to be installed.
- The instruction manual shows:
  - the serial number of the burner;

    .....

  - the address and telephone number of the nearest Assistance Centre;

    .....
    .....
    .....

- The system supplier carefully informs the user about:
  - the use of the system,
  - any further tests that may be necessary before the system is started up,
  - maintenance and the need to have the system checked at least once a year by the manufacturer or another specialised technician.

    To ensure a periodic check, RIELLO recommends the drawing up of a Maintenance Contract.

TECHNICAL DATA

TYPE	448T1
Thermal power – output	19 – 35 kW – 1.6 – 3 kg/h
Fuel	Light oil, viscosity 4 – 6 mm^2/s at 20 °C (1.5 °E)
Electrical supply	Single phase, 230 V ± 10% ~ 50Hz
Motor	Run current 0.7 A – 2850 rpm – 298 rad/s
Capacitor	4 μF
Ignition transformer	Secondary 8 kV – 16 mA
Pump	Pressure 7 – 15 bar
Absorbed electrical power	0.115 kW

BURNER DESCRIPTION

One stage light oil burner.

Fig. 1

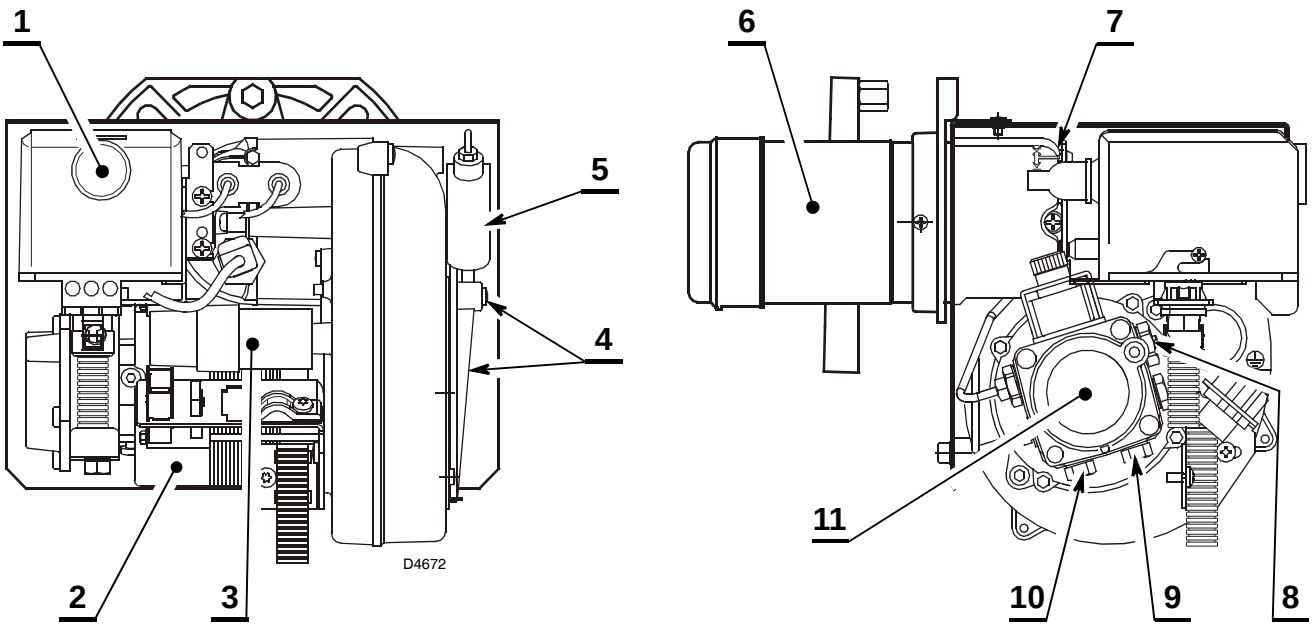

1 – Lock-out lamp and reset button
2 – Motor
3 – Capacitor
4 – Air damper assembly
5 – Hydraulic jack
6 – Combustion head
7 – Combustion head adjustment screw
8 – Vacuum gauge connection
9 – Return line
10 – Suction line
11 – Oil pump

HYDRAULIC JACK OPERATION 5)(Fig. 1)

DANGER

It is strongly recommended a periodic check of the pump pressure operation (annually or better every six months, if the burner operation is continuous).
If the value is lower than 1 bar, compared to that one of the initial setting, please check the cleaning of the pump and line filters.
In case the pressure setting was not restorable, please replace the pump, in order to guarantee that the pump pressure during the pre-purge time is at least 3.7 bar.

BURNER EQUIPMENT

Flexible pipes with nipples . . . . . No. 2
Screws and nuts for flange. . . . . No. 4
Screw with two nuts for flange . . . . . No. 1
Cover . . . . . No. 1
Insulating gasket . . . . . No. 3

FIRING RATE

OVERALL DIMENSIONS

Flange

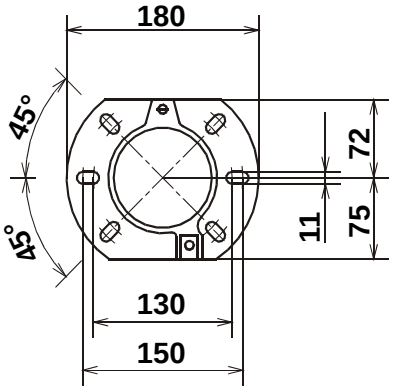

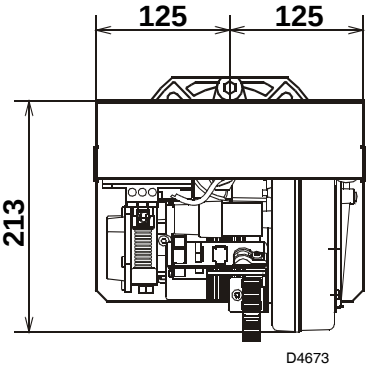

Burner

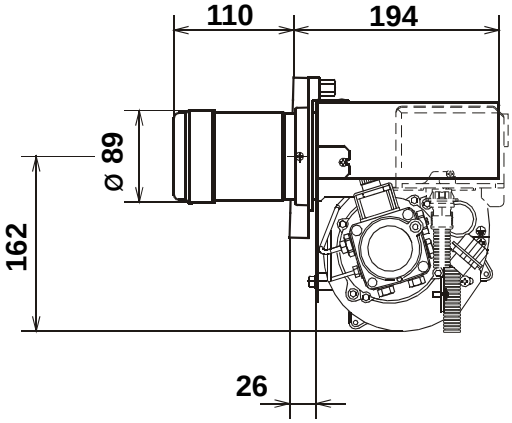

MOUNTING THE BURNER

It is necessary that the insulating gasket is placed between the boiler door and the burner flange.

This insulating gasket has **six holes**, which, if necessary, can be modified as shown on the drawing on the right.

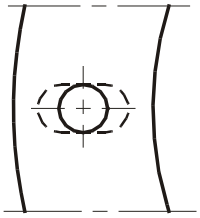

Verify that the installed burner is lightly leaned towards the button.
(See figure 2).

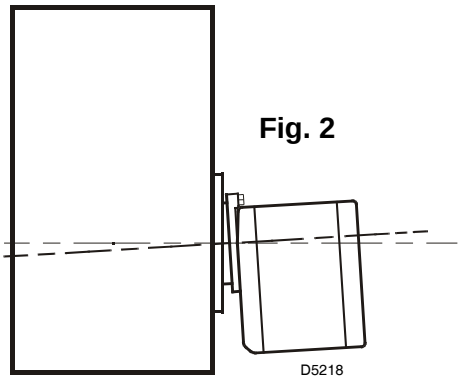

Fig. 2

BURNER FIXING

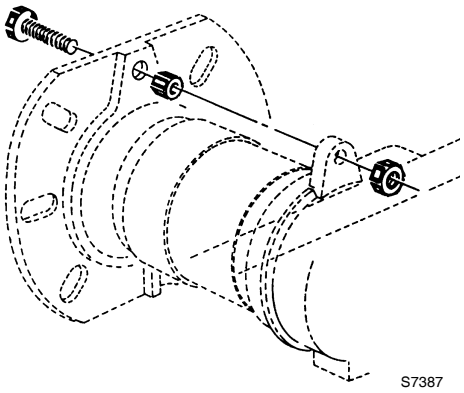

HYDRAULIC SYSTEM

Warning: before starting the burner make sure that the return pipe-line is not clogged: any obstruction would cause the pump seals to break.

WARNING

The pump is supplied for use with a two pipe system.
For use on a one pipe system, it is necessary to **remove the by-pass screw** (**A**, fig. 3).

Fig. 3

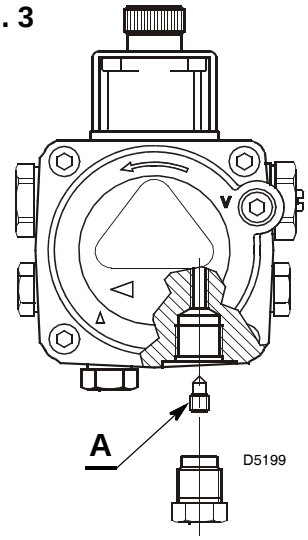

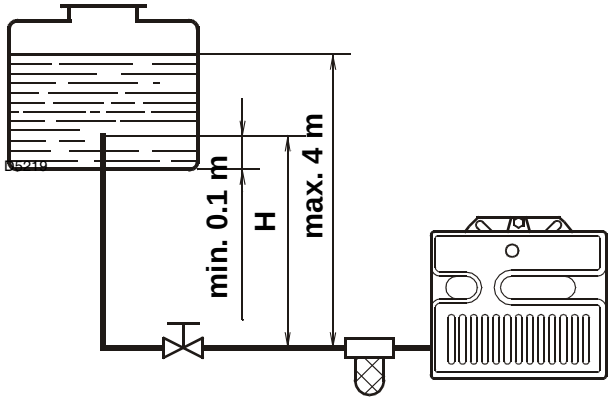

H meters	L meters	
	I. D. 8 mm	I.D. 10 mm
0.5	10	20
1	20	40
1.5	40	80
2	60	100

H = Difference of level.
L = Max. length of the suction line.
I.D. = Internal diameter of the oil pipes.

PRIMING THE PUMP

Loosen the plug of the vacuum gauge (5, fig. 1, page 1) and wait until the fuel flows out.

H meters	L meters	
	I. D. 8 mm	I.D. 10 mm
0	35	100
0.5	30	100
1	25	100
1.5	20	90
2	15	70
3	8	30
3.5	6	20

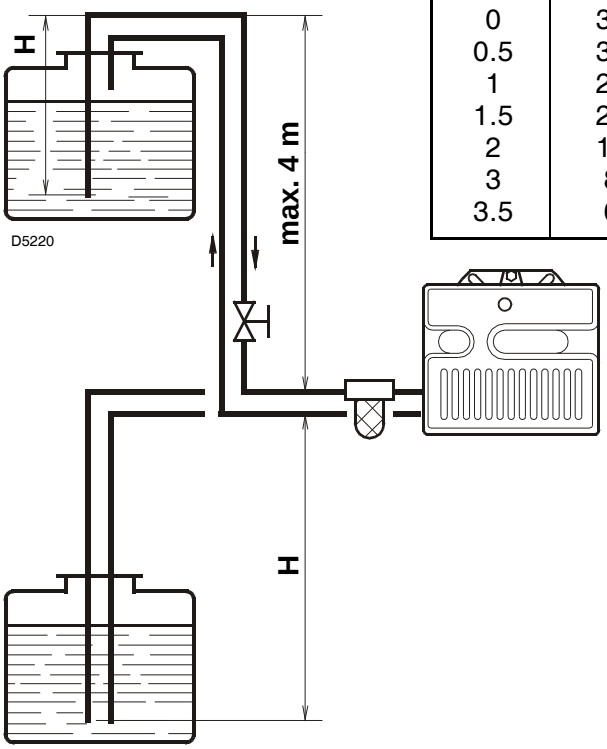

The pump vacuum should not exceed a maximum of 0.4 bar (30 cm Hg). Beyond this limit gas is released from the oil.

Oil lines must be completely air-tight. The return line should terminate in the oil tank at the same level as the suction line; in this case a non-return valve is not required.

When the return line arrives over the fuel level, a non-return valve must be used.

This solution however is less safe than previous one, due to the possibility of leakage of the valve.

PRIMING THE PUMP

Start the burner and wait for the priming. Should lock-out occur prior to the arrival of the fuel, await at least 20 seconds before repeating the operation.

A filter must be installed on the suction fuel line.

ELECTRICAL WIRING

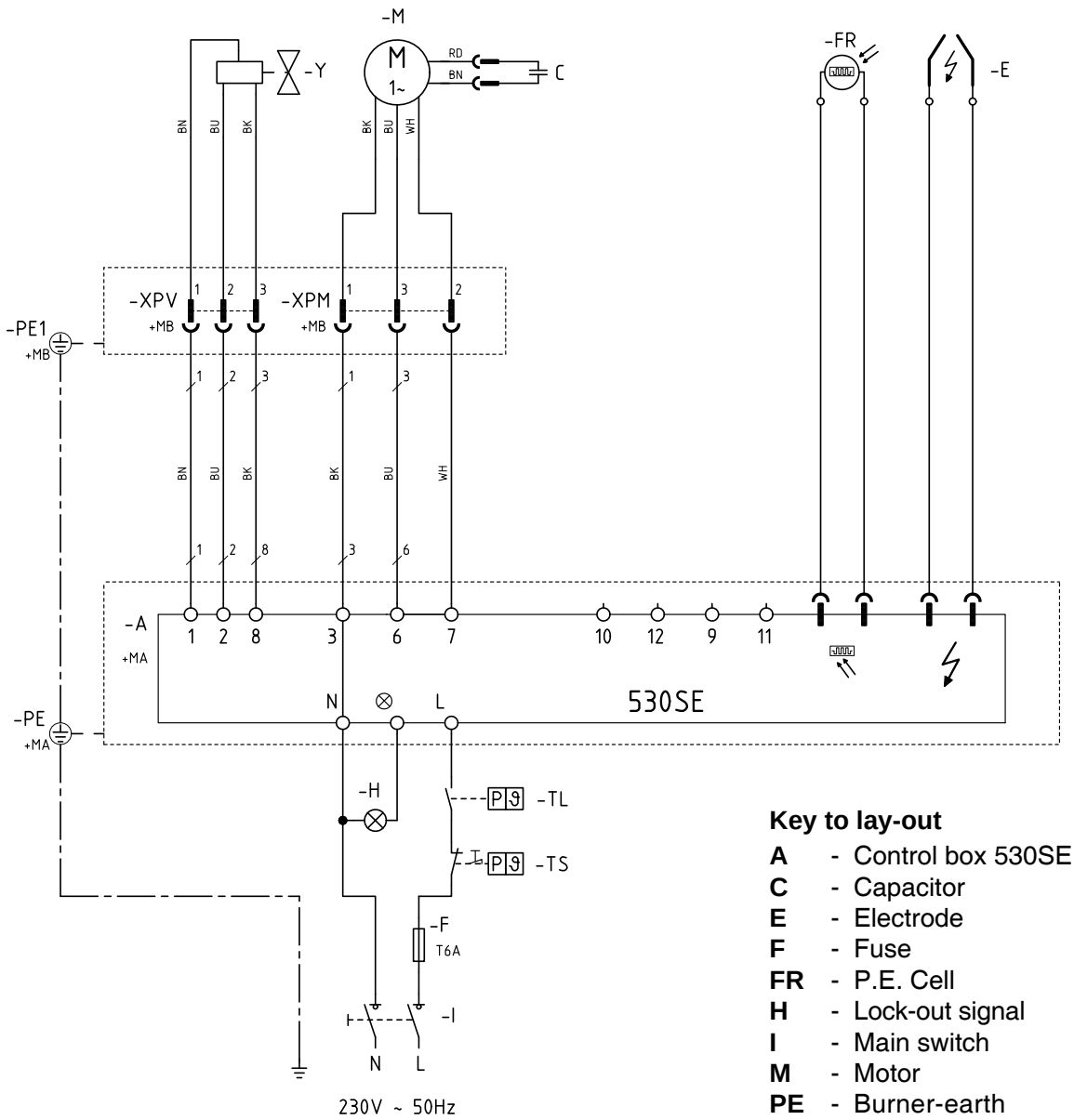

Key to lay-out

A	-	Control box 530SE
C	-	Capacitor
E	-	Electrode
F	-	Fuse
FR	-	P.E. Cell
H	-	Lock-out signal
I	-	Main switch
M	-	Motor
PE	-	Burner-earth
TL	-	Limit thermostat
TS	-	Safety thermostat
XP..	-	Pin plug
Y	-	Oil valve

NOTES:

– **Do not exchange the neutral with the phase.**

– Wires of min. 1 mm^2 section. *(Unless requested otherwise by local standards and legislation).*

– The electrical wiring carried out by the installer must be in compliance with the rules in force in the Country.

CONTROL BOX, (see fig. 4)

To remove the control box (1) from the burner:

➤ Unscrew the fissing screws on the burner cover and remove it.

➤ Unscrew the fissing screws (2) on the plate and remove the control box (1).

➤ Screw the two fissing screws (2) and reassemble the burner cover.

➤ Fix the control box (1) with plate far from the burner.

TESTING

Check the shut-down of the burner by opening the thermostats.

Fig. 4

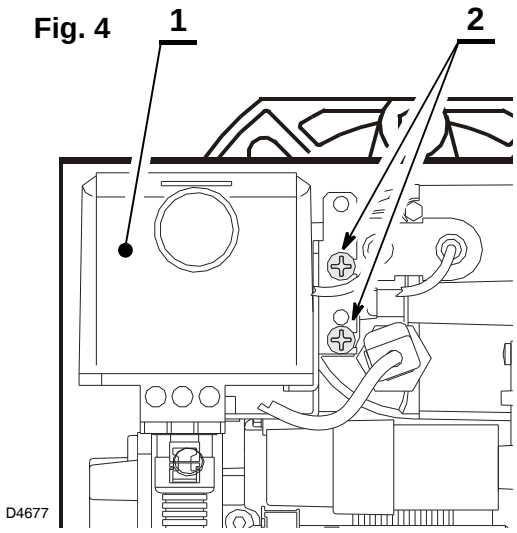

COMBUSTION ADJUSTMENT

In conformity with Efficiency Directive 92/42/EEC the application of the burner on the boiler, adjustment and testing must be carried out observing the instruction manual of the boiler, including verification of the CO and CO_2 concentration in the flue gases, their temperatures and the average temperature of the water in the boiler.

To suit the required appliance output, fit the nozzle then adjust the pump pressure, the setting of the combustion head and the air damper opening in accordance with the following schedule.

The values shown in the table are measured on a CEN boiler (as per EN 267).
They refer to 12.5% CO_2 at sea level and with light oil and room temperature of 20 °C.

Nozzle 1		Pump pressure 2	Burner output	Comb. head adjustment 3	Air damper adjustment 4
GPH	Angle	bar	kg/h ± 4%	Set-point	Set-point
0.40	80°	12	1.6	0	2.4
0.50	60°/80°	12	2.0	1	3.1
0.60	60°/80°	12	2.4	2	3.6
0.65	60°/80°	12	2.6	3	3.8
0.75	60°	12	3.0	4	4.0
SETTING CARRIED OUT IN THE FACTORY					
0.65	60° W	12	2.6	2	2.1

1 NOZZLES RECOMMENDED: Monarch type R - NS; Delavan type W - A - E; Steinen type H - Q ; Danfoss type H - B.

Angle:
60° : in most cases.
80° : in case of flame detachment, during ignitions at low temperatures.

2 PUMP PRESSURE
12 bar : the pump leaves the factory set at this value
14 bar : improves flame retention; it is therefore suitable for ignitions at low temperatures.

3 COMBUSTION HEAD SETTING:

This is done when fitting the nozzle, with the blast tube removed.
It depends on the output of the burner and is carried out by rotating the regulating rod, till the terminal plane of the blast tube is level with the set-point, as indicated in the schedule.

In the sketch on the left, the combustion head is set for an output of 0.60 GPH at 12 bar, while the shutter is level with set-point **2**, as required by the above schedule.

Fig. 5

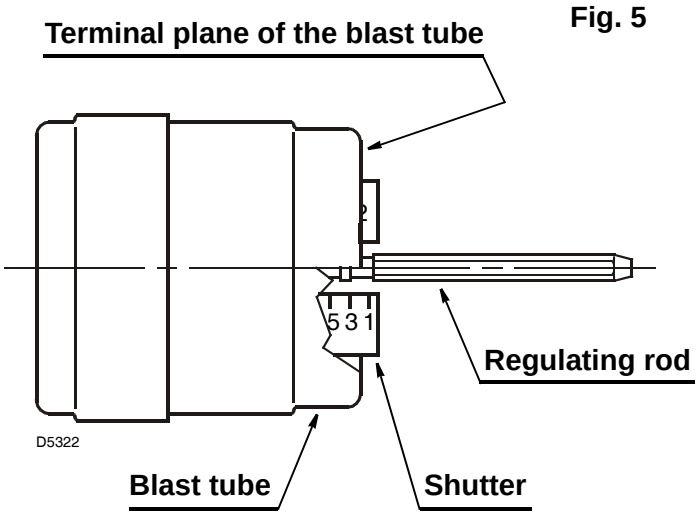

Combustion head settings indicated in the table are valid for most cases.
The setting of the fan output according to the installation should normally be done only through the air damper. Should one subsequently want to retouch also the setting of the combustion head, with the burner running, operate on the rod **(1, fig. 6)** with a 6 mm spanner **(2, fig. 6)** as follows:

Fig. 6

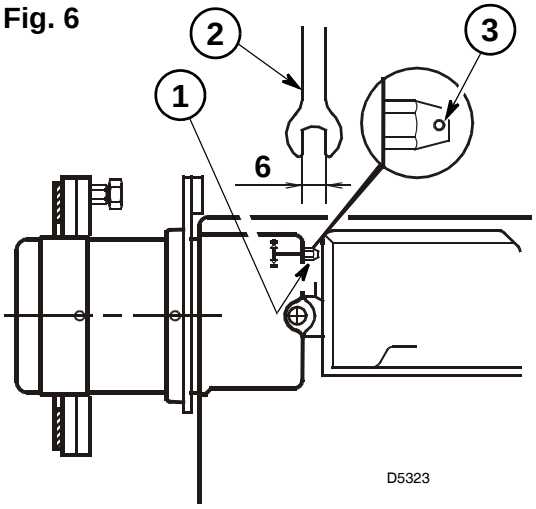

Turn to the right: (sign +), in order to increase the volume of air entering the combustion chamber and thus diminishing its pressure.
There is a reduction of CO_2 and the adhesion of the flame to the air diffuser disc improves.
(Setting advisable for ignitions at low temperatures).

Turn to the left: (sign –), in order to reduce the volume of air entering the combustion chamber and thus increasing its pressure. The CO_2 improves and the adhesion of the flame to the diffuser tends to reduce. *(This setting is not advisable for ignitions at low temperatures).*

In any case do not bring the combustion head setting more than one point away from that indicated in the schedule. One set-point corresponds to 3 turns of the rod; a hole **(3, fig. 6)** at its end facilitates counting the number of turns.

4 AIR DAMPER ADJUSTMENT, (see fig. 7)

The mobile air damper **(A)** operated by the jack **(B)** assures the complete opening of the air intake.
The regulation of the air-rate is made by adjusting the fixed air damper **(C)**, after loosing the screws **(D)**.
When the optimal regulation is reached, **screw tight the screws (D)** to assure a free movement of the mobile air damper **(A)**.
The settings indicated in the schedule refer to the burner with its metal cover fitted and the combustion chamber with “zero” depression.
These regulations are purely indicative.
Each installation however, has its own unpredictable working conditions: actual nozzle output; positive or negative pressure in the combustion-chamber, the need of excess air, etc.
All these conditions may require a different air-damper setting.

Fig. 7

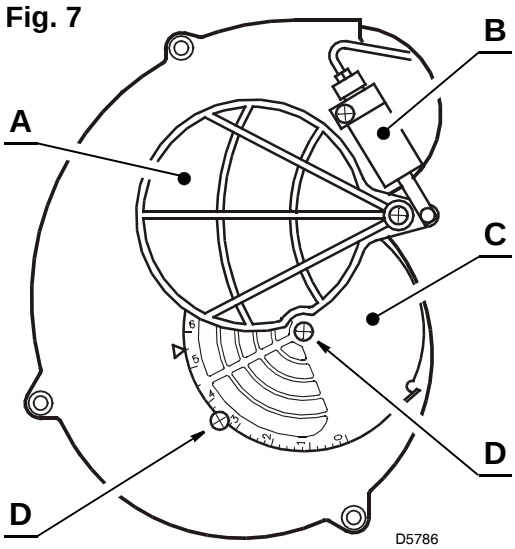

It is important to take account of the fact that the air output of the fan differs according to whether the burner has its metal cover fitted or not.
Therefore we recommended to proceed as follows:
– adjust the air damper as indicated in the table;
– mount the cover, simply by means of the upper screw;
– check smoke number;
– should it become necessary to modify the air output, remove the cover by loosening the screw, adjust the air damper, remount the cover and finally recheck the smoke number.

ELECTRODE SETTING

IMPORTANT:
THESE DIMENSIONS MUST BE OBSERVED

Attention:
Before assembling or removing the nozzle, loosen the screw **(A)** and move the electrodes ahead

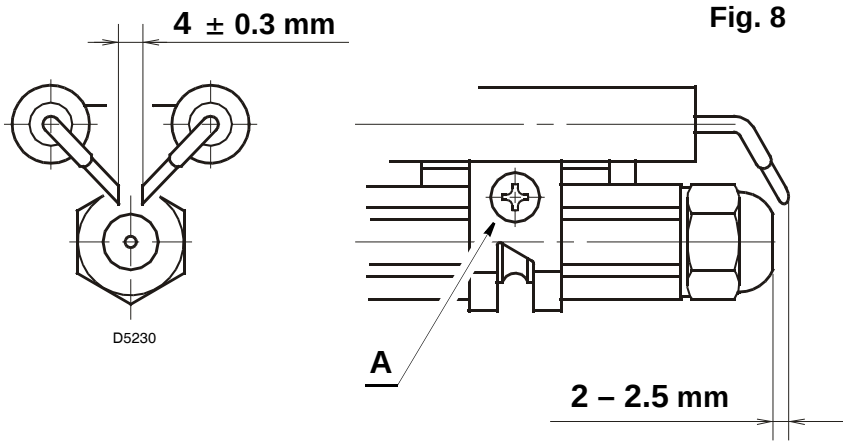

Fig. 8

START-UP CYCLE

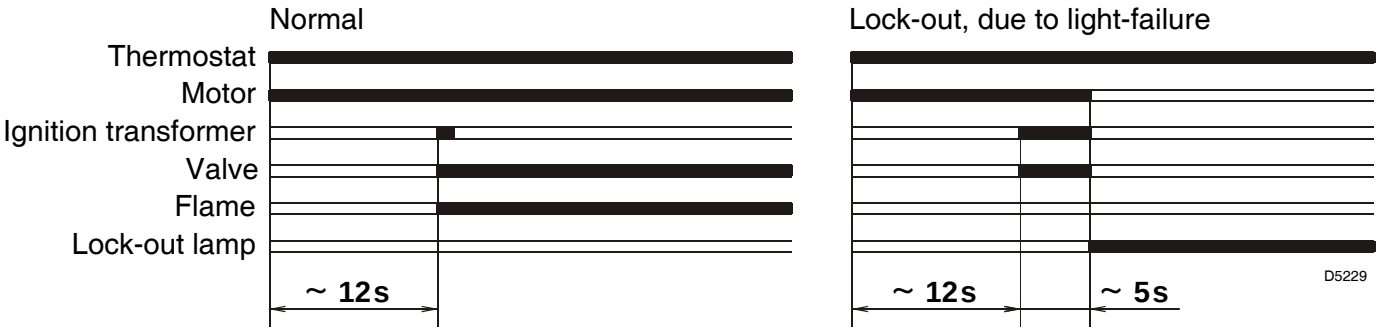

ADJUSTMENTS, TO AVOID FLAME - DETACHMENT, AT BURNER IGNITION

This inconvenience can occur, when the temperature of the light oil decreases below +8 °C.

1) CORRECT POSITIONING OF THE ELECTRODES, (see fig. 8).

2) NOZZLE: ATOMIZING CONE

Choose empt ies or semi-empt ies cones.
For exemple: Delavan type A - E; Steinen type H; Danfoss type H.

3) PUMP - SETTING

The pump is factory set, at a pressure of 12 bar.
When the temperature of the gas-oil decreases below +8 °C, increase the pressure to 14 bar.

4) COMBUSTION-HEAD SETTING

Regulate the combustion-head one set-point further ahead than indicated in the instructions.

Example: *the instructions require to set the combustion-head on set-point 2.*
Instead, the setting is made on set-point 3.

5) FAN - AIR DAMPER ADJUSTMENT

Adjust the damper, reducing the excess air until the Bacharach number is not near 1.
(i.e. a combustion with the lowest possible excess-air).

MAINTENANCE

The burner requires periodic maintenance carried out by a qualified and authorised technician **in conformity with legislation and local standards.**

Periodic maintenance is essential for the reliability of the burner, avoiding the excessive consumption of fuel and consequent pollution.

Before carrying out any cleaning or control always first switch off the electrical supply to the burner acting on the main switch of the system.

THE BASIC CHECKS ARE:

- ➤ Check there are no occlusions or obstructions in the inlet or return pipes, in the air suction areas and in the combustion product waste pipe.
- ➤ Clean the filter in the oil suction line and in the pump.
- ➤ Check for correct fuel consumption.
- ➤ Check that the burner electrical connections are correct.
- ➤ Replace the nozzle and check the correct position of electrodes.
- ➤ Clean the combustion head in the fuel exit area.
- ➤ Check that the positioning of the combustion head is correct and that it is properly fixed to the boiler.
- ➤ Check that the air damper is positioned correctly.

Let the burner run at full capacity for about ten minutes, setting all the elements correctly as explained in this manual. **Then carry out the analysis of the combustion by checking:**

- Smoke index as per the Bacharach scale;
- CO_2 percentage (%);
- CO content (ppm);
- NOx content (ppm);
- Smoke temperature at the chimney.

说明书的相关信息

引言

说明书随燃烧器一起提供：

- 它是产品不可或缺的组成部分，不得将其与产品分离；因此必须小心保存以便查阅，如果将燃烧器转给另一个用户或转移至另一个系统，则说明书必须跟随燃烧器一起转移。如果说明书损坏或丢失，则必须从您就近的 RIELLO Technical Assistance Centre（技术支持中心）索取说明书的复印件；
- 说明书只能由有资格的人员使用；
- 说明书提供了有关燃烧器安装、启动、使用和维护的重要指示和安全警告。

系统和说明书的交付

一旦交付系统：

- 系统制造商也必须将说明书交付给用户，并建议其将说明书保存在热发生器的安装区域附近。
- 说明书上显示：
  - 燃烧器的序列号；

    .....

  - 最近 Assistance Centre（支持中心）的地址和电话号码；

    .....

    .....

    .....

- 系统制造商必须告知用户有关以下内容的准确信息：
  - 系统的使用；
  - 启动系统前需要进行的测试；

- 必需的维护和检查（每年必须由制造商代表或别的专业技术人员至少检查系统一次）。

要保证定期检查，RIELLO 建议遵照 Maintenance Contract（维护合同）的规定。

技术参数

型号	448T1
燃烧器出力	19 – 35 kW – 1.6 – 3 kg/h
燃料	轻油，20 °C 时的最大黏度：4-6 mm^2/s (1.5°E)
电源	单相， 230V ± 10% ~ 50Hz
电机	运行电流 0.7A – 2850 rpm – 298 rad/s
电容	4 μF
点火变压器	次级 8 kV – 16 mA
油泵	压力： 7 – 15 bar
耗电量	0.115 kW

燃烧器说明

一段火轻油燃烧器

图 . 1

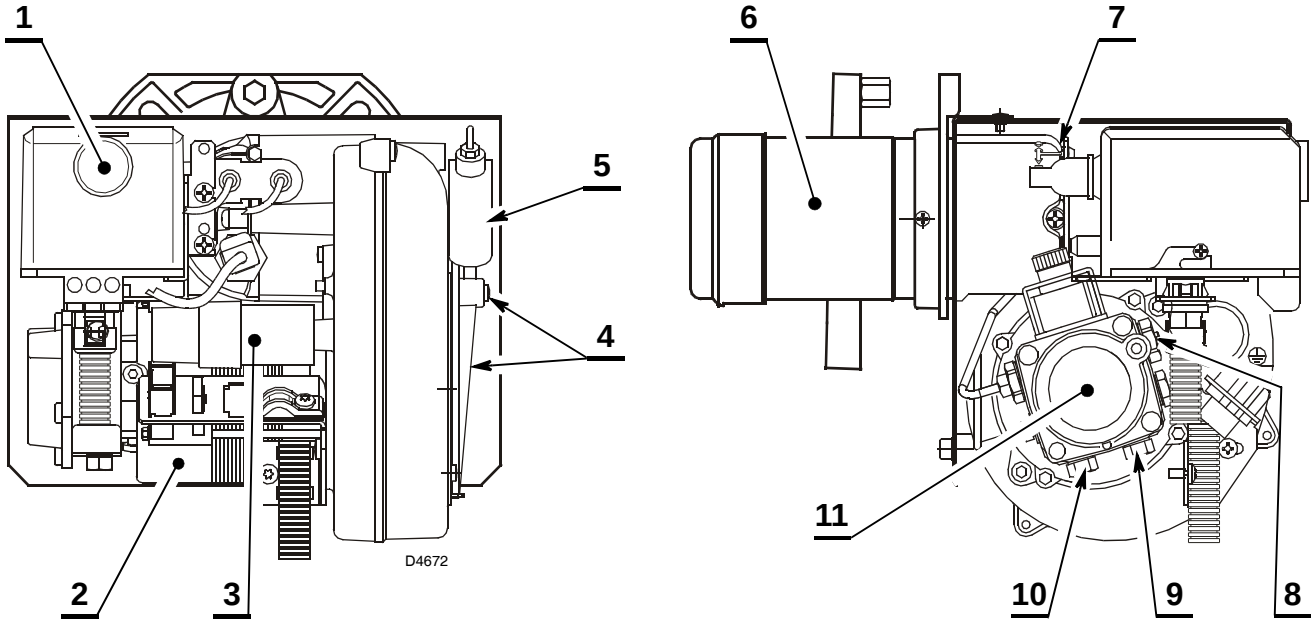

1 – 复位按钮和锁定指示灯
2 – 电机
3 – 电容
4 – 风门挡板组件
5 – 液压装置
6 – 燃烧头
7 – 燃烧头调整螺栓
8 – 真空表接口
9 – 回油管
10 – 进油管
11 – 油泵

液压千斤顶运作方式 5)（图 1）

强烈建议周期性地检查泵压力是否正常运作 （ 每年一次，或者在燃烧器不断运行的情况下，建议检查的时间为六个月一次 ）。
如果压力值比初始设定值小 1 巴， 检查泵和线路中的过滤器是否干净。
如果压力无法复位， 请更换泵以便保证预吹扫过程中，压力至少为 3.7 巴。

燃烧器附件

带接头的软油管 . . . . . 2 根
螺栓并带螺帽. . . . . 4 套
螺栓并带螺帽. . . . . 1 套
盖. . . . . 1 个
隔热垫 . . . . . 3 个

负荷图

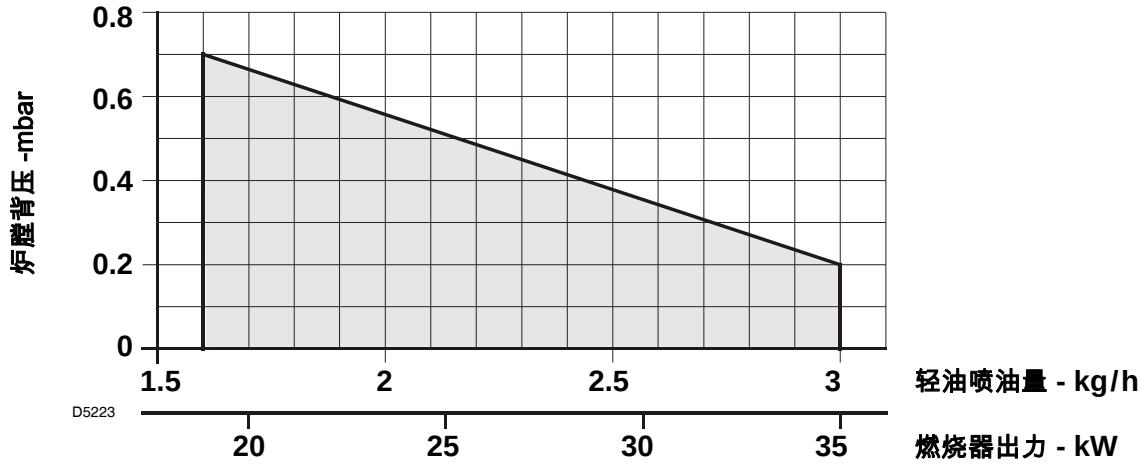

外观尺寸

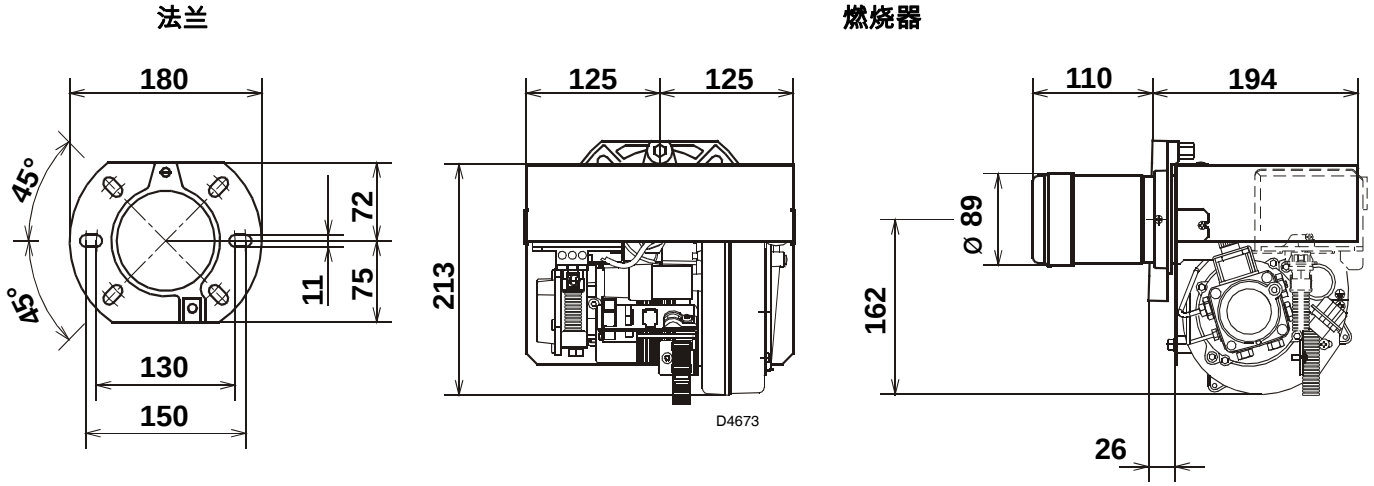

安装燃烧器

在燃烧器法兰和锅炉炉门之间必须安装隔热垫。
隔热垫有 6 个孔，如有必要可按右图图示调节这 6 个孔。

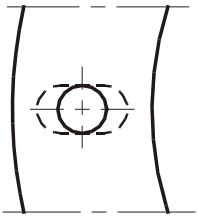

燃烧器固定

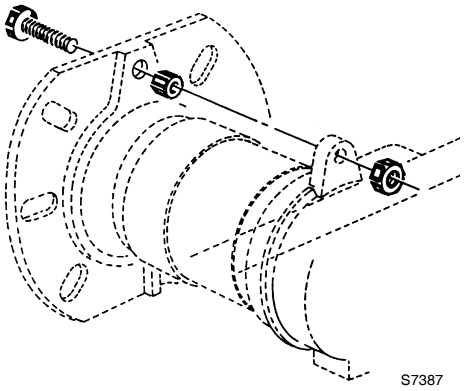

检查安装好的燃烧器，确保燃烧器如图示略微倾斜(图. 2)。

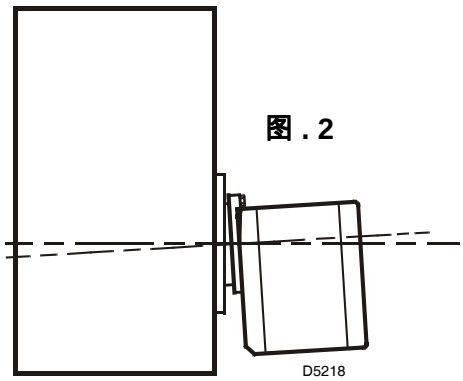

图 . 2

油路系统

警告： 启动燃烧器前确保回油管路畅通：
回油管路堵塞可能造成油泵密封损坏。

警告
油泵用于双油管系统。如要单油管运行，必须拆**卸掉旁路螺栓** (**A**, 图 . 3)。

图 . 3

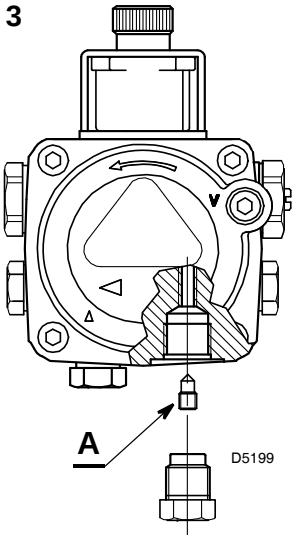

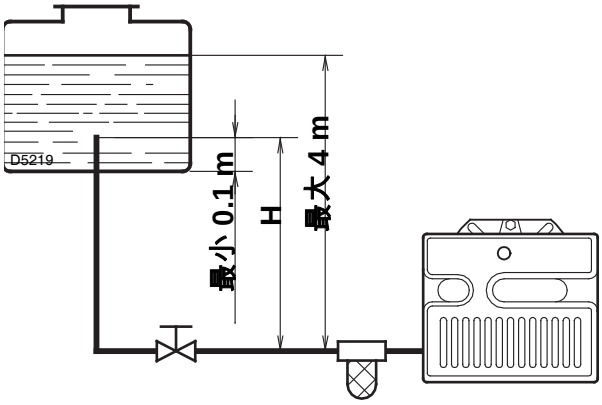

H 米	L 米	
	I.D. 8 mm	I.D. 10 mm
0.5	10	20
1	20	40
1.5	40	80
2	60	100

油泵首次启动
松开真空表接口上的螺栓 (5, 图 . 1, 第 1 页) 直到有油溢出。

H = 液面高度差；
L = 进油管最大长度；
I.D.= 油管内径。

H 米	L 米	
	I. D. 8 mm	I.D. 10 mm
0	35	100
0.5	30	100
1	25	100
1.5	20	90
2	15	70
3	8	30
3.5	6	20

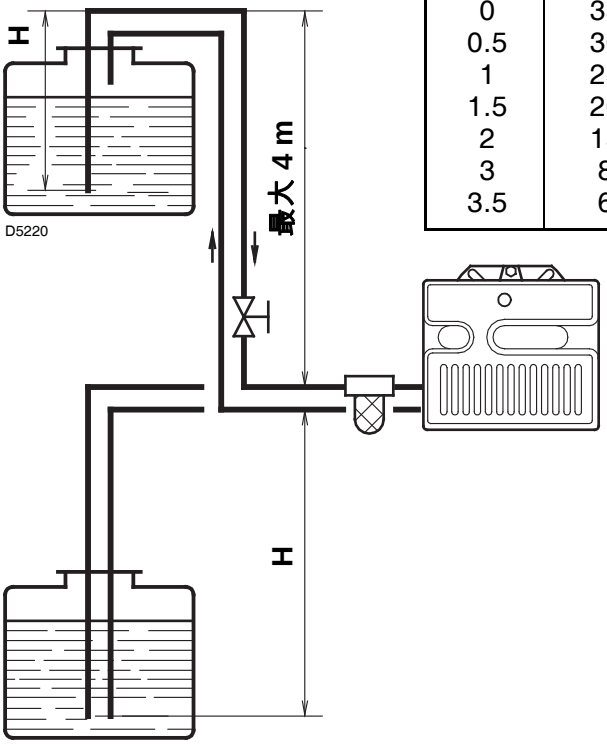

油泵真空度不能超过 0.4 bar (30 cm Hg)。超过此限值会导致油气分离。

油管路必须密封不透气。回油管必须插进油箱油面下，末端和进油管在同一水平面上。这种情况下可以不安装止回阀。

回油管末端高出油面时，必须安装止回阀。由于阀可能存在泄漏，因此此方案不如前一方案安全。

油泵注油
启动燃烧器等待油泵注油。如果油注入油泵前发生锁定，至少等待 20 秒后再重复此操作。

进油管上必须安装过滤器。

电气接线图

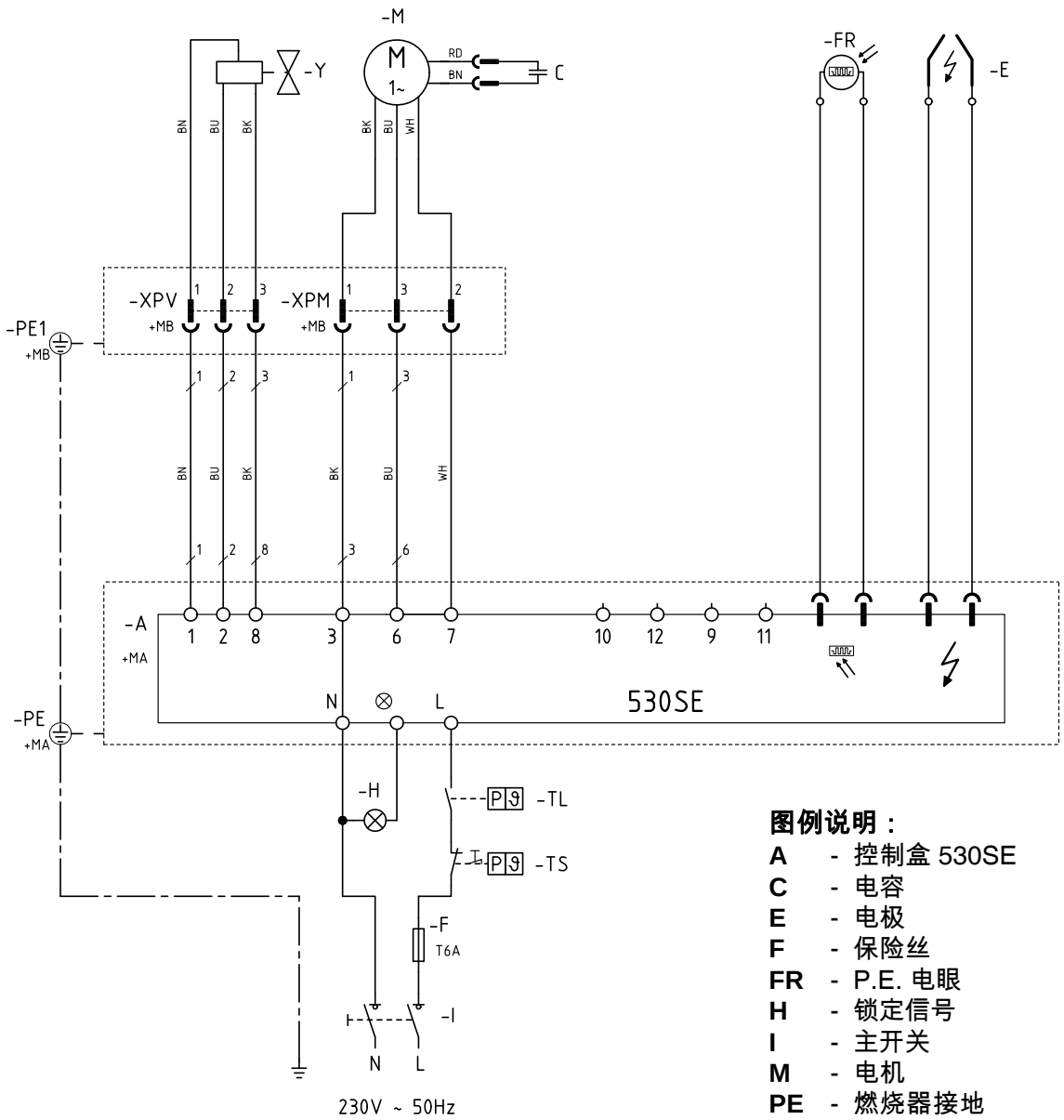

图例说明：

A	-	控制盒 530SE
C	-	电容
E	-	电极
F	-	保险丝
FR	-	P.E. 电眼
H	-	锁定信号
I	-	主开关
M	-	电机
PE	-	燃烧器接地
TL	-	启动温控开关
TS	-	安全温控开关
XP..	-	插头
Y	-	油阀

注意：

– **火线和零线不要接反。**
– 使用横截面面积不小于 1mm^2 的电缆。*(除非本地标准或法规有其它要求)。*
– 电气接线必须由有资格人员执行，必须遵守本国现行的法规和规范。

控制盒，(见图 . 4)

按如下步骤从燃烧器上拆卸控制盒 (1)：

➤ 松开燃烧器盖上的固定螺栓并拆下盖子。
➤ 松开固定控制盒的固定螺栓 (2) 并拆下控制盒 (1)。
➤ 拧紧两颗固定螺栓 (2) 并装回燃烧器机盖。
➤ 从燃烧器侧装回控制盒 (1)。

测试

断开温控开关检查燃烧器是否停机。

Fig. 4

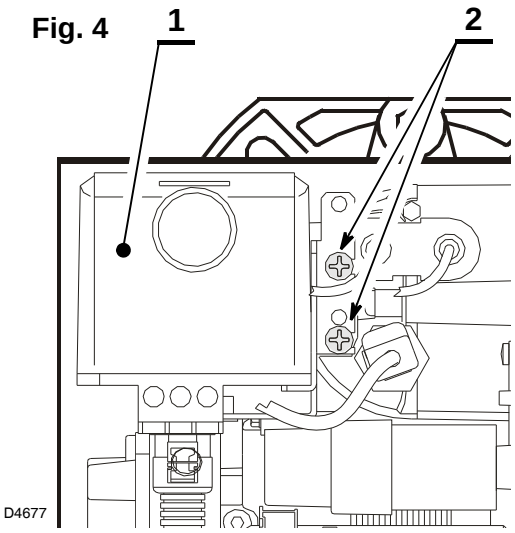

燃烧调整

根据效率指令 92/42/EEC 对于使用在锅炉上的燃烧器，调整和测试必须根据锅炉的使用说明书来执行，包括检验烟气中 CO 和 CO_2 的含量，烟气温度和锅炉内热水的平均温度。

为使燃烧器达到额定的出力，首先安装好合适的喷嘴，然后根据下表对燃烧头的位置和风门挡板开度进行设置。

下表中的值在 CEN 锅炉上测试得到 (根据欧盟燃油燃烧器 EN 267 标准)。
测试条件为 CO_2 浓度为 12.5%，海平面高度，轻油，室温 20°C。

喷嘴 1		油泵压力 2	燃烧器出力	燃烧头调整 3	风门挡板调整 4
GPH	雾化角	bar	kg/h ± 4%	设置点	设置点
0.40	80°	12	1.6	0	2.4
0.50	60°/80°	12	2.0	1	3.1
0.60	60°/80°	12	2.4	2	3.6
0.65	60°/80°	12	2.6	3	3.8
0.75	60°	12	3.0	4	4.0
出厂设置值					
0.65	60° W	12	2.6	2	2.1

1 **推荐使用的喷嘴** : Monarch R - NS 型； Delavan W - A - E 型；Steinen H - Q 型； Danfoss H - B 型。

雾化角 :
60° : 适应于多数情况。
80° : 适应于火焰分离，或低温点火情况。

2 **油泵压力**
12 bar : 出厂时的设置值。
14 bar : 提高火焰稳定性；也适应于低温点火情况。

3 **燃烧头的设置 :**

安装喷嘴时设置，先拆下燃烧筒。
根据燃烧器最大出力来设置(如上表所示)，通过旋转调节杆来设置，直到燃烧筒的端面与设定 值刻度对齐。
图 5 中，燃烧头为 12bar 时 0.6 GPH 的出力而设置，按上表要求，此时内风筒应设置在 **2**。

图 . 5

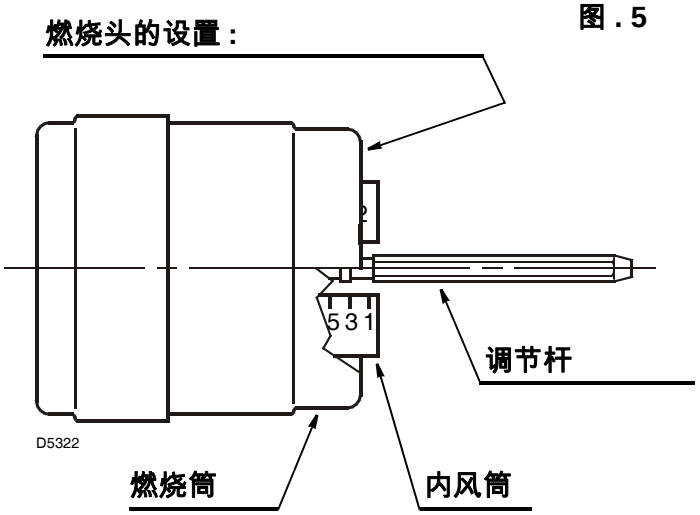

上表所示燃烧头的设置针对多数情况有效。
通常只能通过风门挡板来调节风量大小。如果在燃烧头安装好后在燃烧器运行中还想调整燃烧头 (图 . 6) 的设置，用 6mm 的扳手 （ 2 图 .6 ）来旋转调节杆 **(1 图 .6)** ，具体操作如下：

图 . 6

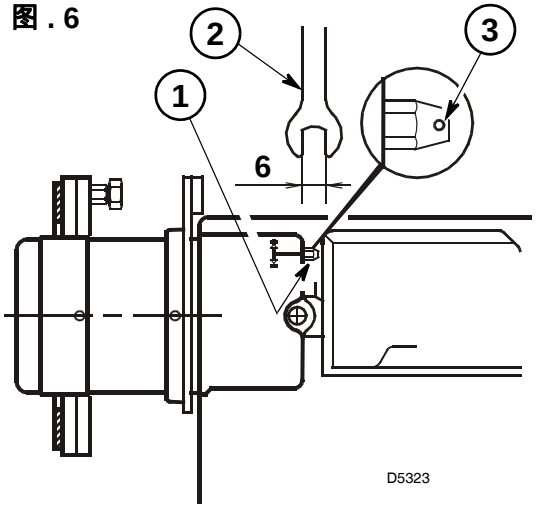

向右旋转：(标记 + 的方向)
可以增加进入燃烧室的助燃空气量 ，减小风压。烟气中 CO_2 含量减小并改善燃烧状况。

(本设置适用于较低温度点火)。

向左旋转： (标记 – 的方向)
可以减少进入燃烧室的助燃空气量 ，增加风压。烟气中 CO_2 含量增加但火焰贴盘现象减少。
(本设置不适用于较低温度点火)。

设置燃烧头时，实际设定值不要偏离上表中给出的参考值太大 (不要超过一个刻度)。调节杆旋转 3 圈相当于调节 1 个刻度；调节杆末端的孔 **(3 图 .6)** 可以帮助识别旋转圈数。

4 风门挡板调整，(图 . 7)
活动风门挡板 **(A)** 被液压装置 **(B)** 带动确保进风口全开。
风量的调节是通过固定风门挡板 **(C)** 的调节来实现，松开螺栓 **(D)**，达到设置值后，**拧紧螺栓 (D)** 保证活动风门挡板 **(A)** 能自由活动。
上表中的设定值的参考条件是：
燃烧器外盖安装并且炉膛背压为“ 0”。这些规则仅供参考。对于每个具体的燃烧器，由于具有各不相同的工作条件：
实际的喷嘴流量；炉膛内的正或负的背压，
以及不同的过量空气系数等等。从而对风门挡板的设置要求不同。
安装或不安装燃烧器的外盖，实际的风量会大不相同，认识到这点很重要。

图 . 7

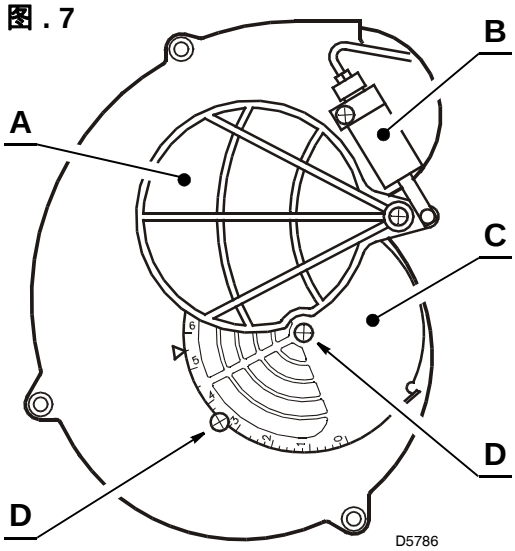

因此建议按如下操作：
按照上表中设置风门挡板位置；
盖上外盖，只是简单拧上上面的螺栓；
检查烟气等级；
如果需要改变风量大小，先松开螺栓拆下外盖，调整风门挡板，然后重新盖上外盖后再检查烟气等级。直到烟气合格。

电极调整

重要：
这些尺寸必须得到满足。

注意：
拆卸或安装喷嘴时，必须松开螺栓 **(A)** 并拆卸点火电极头部。

图 . 8

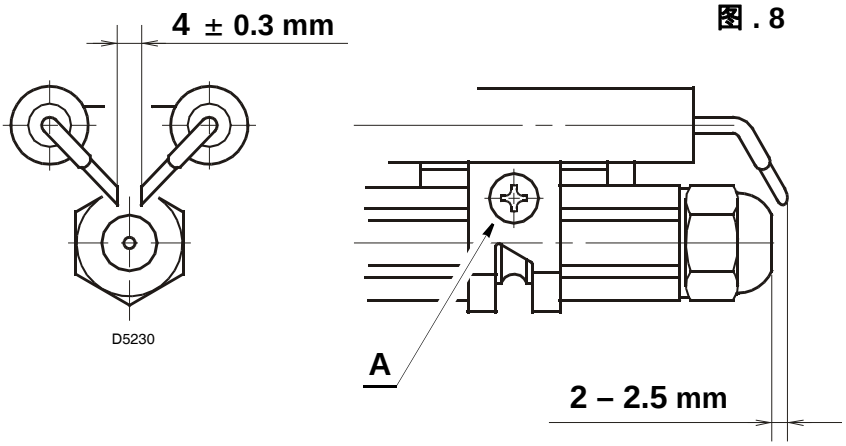

燃烧器启动周期

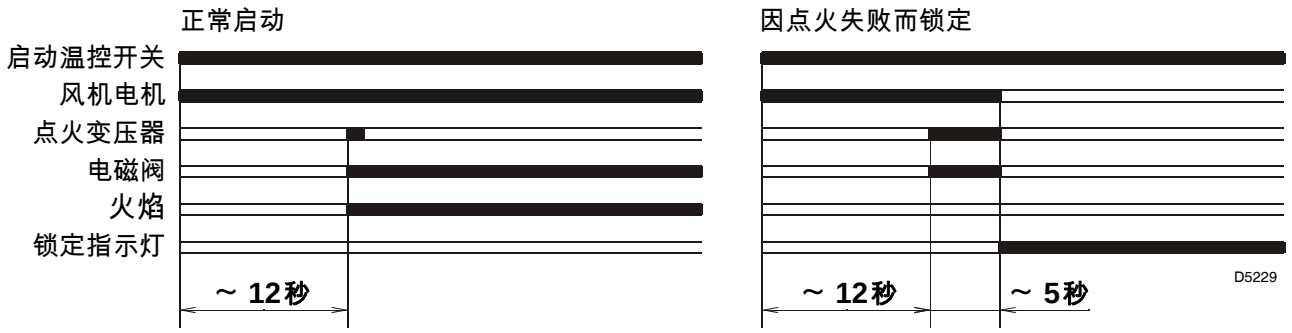

避免点火时火焰分散的调整

轻油油温低于 +8 °C 时有可能出现火焰分散，按如下步骤调整。

1) 确保点火电极位置正确 , (见图 . 8)。

2) 喷嘴： 雾化锥体
选择中空或半中空雾化锥体的喷嘴。
例如 ：Delavan A - E 型； Steinen H 型； Danfoss H 型。

3) 油泵 - 设置
油泵出厂时油压设置在 12 bar。
当油温低于 +8 °C 时，提高油泵油压到 14 bar。

4) 燃烧头的设置
燃烧头的设置比说明书中的建议值多一个设置点。
例如： *说明书要求燃烧头设置在点 2。*
实际上，设置到设置点 3。

5) 风机 - 风门挡板调整
调节风门挡板，减少过剩空气直到 烟气黑度 Bacharach 值接近 1。
(即在最小过量空气的条件下燃烧)。

维护

燃烧器必须定期维护，维护人员必须是有资格的并 **通过相关法规和本地标准认证的人员。**

定期维护可以保证燃烧器的可靠性，**避免燃料浪费和污染物排放的增加。**

清洁燃烧器前，切断燃烧器的主电源开关。

基本检查项目：

- ➤ **检查进油管和回油管，进风口和排烟口均没有遮挡或堵塞。**
- ➤ **清洁油泵和进油管路上的过滤器。**
- ➤ **检查燃料消耗是否正确。**
- ➤ **检查燃烧器的电气接线是否正确。**
- ➤ **更换喷嘴并检查点火电极位置是否正确。**
- ➤ **清洁燃烧头。**
- ➤ **检查燃烧头的位置是否正确，安装是否牢固。**
- ➤ **检查风门挡板位置是否正确。**

按本手册正确设定好燃烧器，让燃烧器在最大出力下运行十分钟。**然后用烟气分析仪测量烟气**：

- **烟气黑度；**
- CO_2 百分含量 (%) ；
- CO 含量 (ppm) ；
- NOx 含量 (ppm) ；
- **烟气温度。**

Registered Office - 公司注册所在地 :
RIELLO S.p.A.
I-37045 Legnago (VR)
Tel.: +39.0442.630111
http:// www.riello.it
http:// www.rielloburners.com

Manufacturing site:
Riello Heating Equipment (Shanghai) CO., LTD
No. 388, Jinbai Road - Jinshan Industrial Zone
201506 - Shanghai
CHINA

生产场所 :
Riello Heating Equipment (Shanghai) CO., LTD
利雅路热能设备 (上海) 有限公司
上海市金山工业区金百路 388 号