Installation, use and maintenance instructions
安装、使用和维护手册

RIELLO

GB **Forced draught gas burners**

CN **强制通风燃气燃烧器**

Progressive two-stage operation
平滑两段火运行

CODE - 代码	MODEL - 型号	TYPE - 类型
20042306	RS 70	821 T1
20042307	RS 100	822 T1
20042305	RS 130	823 T1

20044037 (2) - 02/2012

GB **CONTENTS**

N.B.
Figures mentioned in the text are identified as follows:
1)(A) = part 1 of figure A, same page as text;
1)(A)p.3 = part 1 of figure A, page number 3.

TECHNICAL DATA

MODEL			RS 70		RS 100		RS 130	
TYP			821 T1		822 T1		823 T1	
OUTPUT (1)	2nd stage	kW	465 - 814		698 - 1163		930 - 1512	
		Mcal/h	400 - 700		600 - 1000		800 - 1300	
	min. 1st stage	kW	192		232		372	
		Mcal/h	165		200		320	
FUEL			NATURAL GAS: G20 - G21 - G22 - G23 - G25					
			G20	G25	G20	G25	G20	G25
- Net calorific value		kWh/Nm³	10	8,6	10	8,6	10	8,6
		Mcal/Nm³	8,6	7,4	8,6	7,4	8,6	7,4
- Absolute density		kg/Nm³	0,71	0,78	0,71	0,78	0,71	0,78
- Max. delivery		Nm³/h	81	94	116	135	151	175
- Pressure at maximum delivery (2)		mbar	10,3	15,2	9,3	13,7	8,6	12,7
OPERATION			• Intermittent (min. 1 stop in 24 hours). • Two-stage (high and low flame) and single-stage (all-nothing)					
STANDARD APPLICATIONS			Boilers: water, steam, diathermic oil					
AMBIENT TEMPERATURE		°C	0 - 40					
COMBUSTION AIR TEMPERATURE		°C max	60					
ELECTRICAL SUPPLY		V	230 - 400 with neutral ~ +/-10%					
		Hz	50 - three-phase					
ELECTRIC MOTOR		rpm	2800		2800		2800	
		W	1100		1500		2200	
		V	220/240 - 380/415		220/240 - 380/415		220/240 - 380/415	
		A	4,8 - 2,8		5,9 - 3,4		8,8 - 5,1	
IGNITION TRANSFORMER		V1 - V2	230 V - 1 x 8 kV					
		I1 - I2	1 A - 20 mA					
ELECTRICAL POWER CONSUMPTION		W max	1400		1800		2600	
ELECTRICAL PROTECTION			IP 44					
IN CONFORMITY WITH EEC DIRECTIVES			2004/108 - 2006/95 - 2006/42					
NOISE LEVELS (3)		dBA	75		77		78,5	

(1) Reference conditions: Ambient temperature 20°C - Barometric pressure 1000 mbar - Altitude 100 m a.s.l.
(2) Pressure at test point 16)(A)p.3, with zero pressure in the combustion chambre, with open gas ring 2)(B)p.7 an maximum burner output
(3) Sound pressure measured in manufacturers combustion laboratory, with burner operating on test boiler and at maximum rated output.

VARIANTS

Model	Electrical supply	Blast tube length mm
RS 70	three-phase	250
RS 100	three-phase	250
RS 130	three-phase	280

GAS CATEGORY

COUNTRY	CATEGORY
IT - AT - GR - DK - FI - SE	$II_{2H3B / P}$
ES - GB - IE - PT	II_{2H3P}
NL	$II_{2L3B / P}$
FR	II_{2Er3P}
DE	$II_{2ELL3B /P}$
BE	$I_{2E(R)B}$, I_{3P}
LU - PL	$II_{2E 3B/P}$

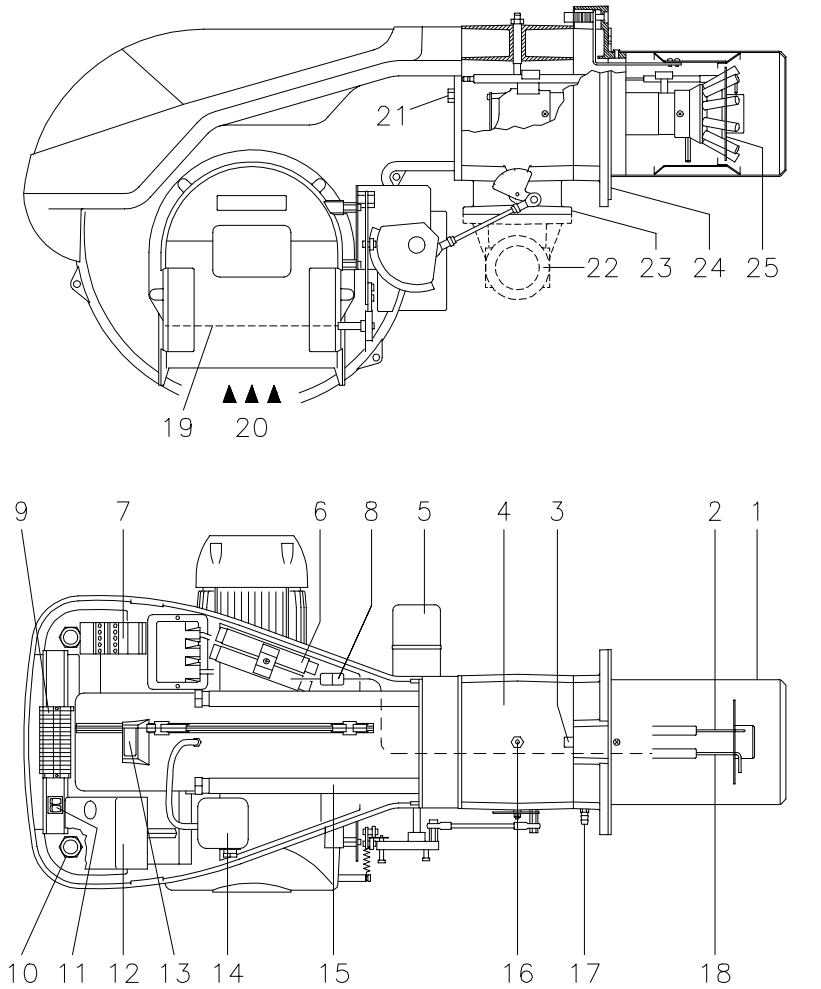

D3030 **(A)**

mm	A	B	C	kg
RS 70	1300	740	682	70
RS 100	1300	740	682	73
RS 130	1300	740	682	76

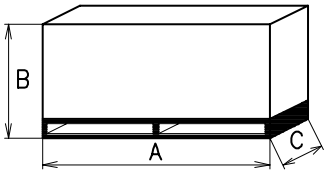

D36 **(B)**

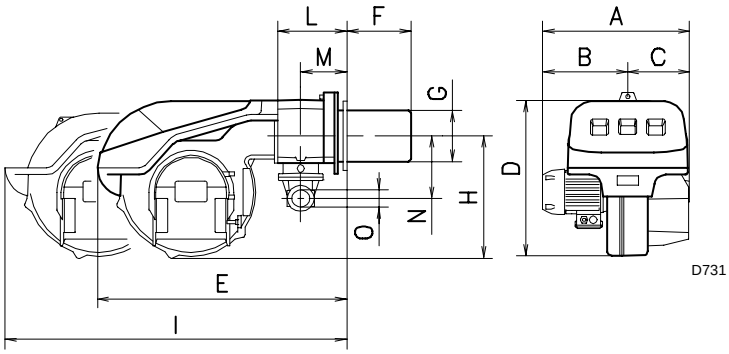

D731

mm	A	B	C	D	E	F	G	H	I	L	M	N	O
RS 70	511	296	215	555	840	250	179	430	1161	214	134	221	2”
RS 100	527	312	215	555	840	250	179	430	1161	214	134	221	2”
RS 130	553	338	215	555	840	280	189	430	1161	214	134	221	2”

(C)

BURNER DESCRIPTION (A)

1 Combustion head
2 Ignition electrode
3 Screw for combustion head adjustment
4 Sleeve
5 Servomotor controlling the gas butterfly valve and of air gate valve (by means of a variable profile cam mechanism).
When the burner is stopped the air gate valve will be completely closed to reduce heat loss due to the flue draught, which tends to draw air from the fan air inlet.
6 Extension for slide bars 15)
7 Motor contactor and thermal cut-out reset button
8 Plug-socket on ionisation probe cable
9 Terminal strip
10 Fairleads for electrical connections by installer
11 Two switches:
- one “burner off-on”
- one for “1st - 2nd stage operation”
12 Control box with lock-out pilot light and lock-out reset button
13 Flame inspection window
14 Minimum air pressure switch (differential operating type)
15 Slide bars for opening the burner and inspecting the combustion head
16 Gas pressure test point and head fixing screw
17 Air pressure test point
18 Flame sensor probe
19 Air gate valve
20 Air inlet to fan
21 Screws securing fan to sleeve
22 Gas input pipework
23 Gas butterfly valve
24 Boiler mounting flange
25 Flame stability disk

Two types of burner failure may occur:
- **Control box lock-out:** if the control box 12)(A) pushbutton (red led) lights up, it indicates that the burner is in lock-out.
To reset, hold the pushbutton down for between 1 and 3 seconds.
- **Motor trip:** release by pressing the pushbutton on thermal cutout 7)(A).

PACKAGING - WEIGHT (B)

Approximate measurements
- The burner stands on a wooden base which can be lifted by fork-lifts.
Outer dimensions of packaging are indicated in (B).
- The weight of the burner complete with packaging is indicated in Table (B).

MAX. DIMENSIONS (C)

Approximate measurements
The maximum dimensions of the burner are given in (C).
Bear in mind that inspection of the combustion head requires the burner to be opened by withdrawing the rear part on the slide bars.
The maximum dimension of the burner when open is give by measurement I.

STANDARD EQUIPMENT

1 - Gas train flange
1 - Flange gasket
4 - Flange fixing screws M 10 x 35
1 - Thermal insulation screen
2 - Extensions 6)(A) for slide bars 15)(A) (for models with 385-415 mm blast tube)
4 - Screws to secure the burner flange to the boiler: M 12 x 35
1 - Instruction booklet
1 - Spare parts list

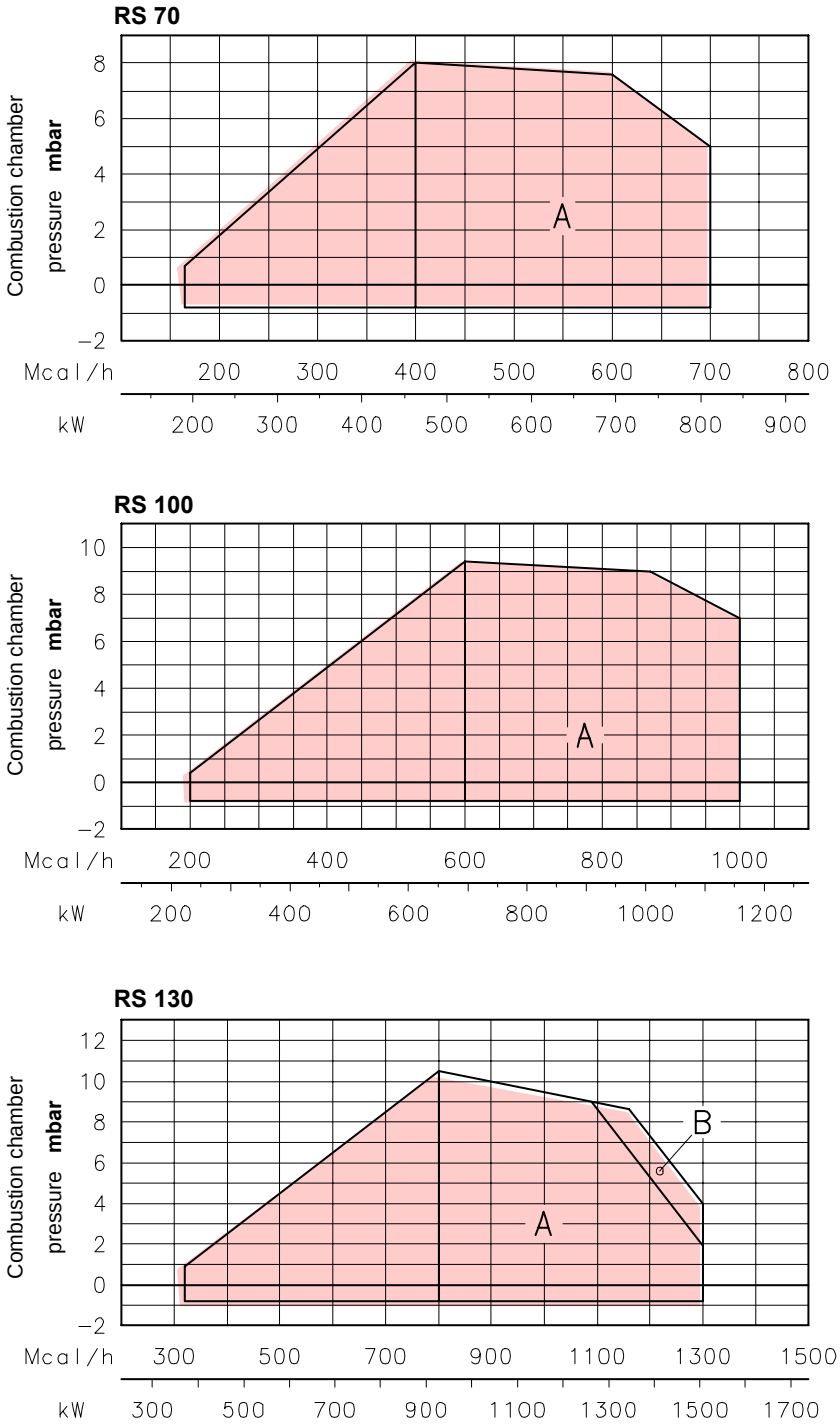

(A) D950

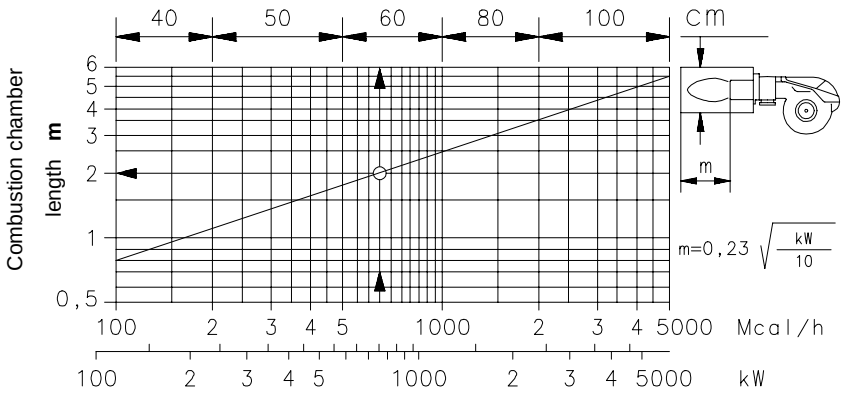

(B) D715

FIRING RATES (A)

The RS 70-100-130 Model burners can work in two ways: one-stage and two-stage

MAXIMUM OUTPUT must be selected in area A. In order to utilize also area B (RS 130) it is necessary to perform the calibration of the combustion head as explained on page 6.

MINIMUM OUTPUT must not be lower than the minimum limit shown in the diagram.

RS 70 = 192 kW
RS 100 = 232 kW
RS 130 = 372 kW

Important

The FIRING RATE value range has been obtained considering an ambient temperature of 20 °C, and an atmospheric pressure of 1000 mbar (approx. 100 m above sea level) and with the combustion head adjusted as shown on page 7.

TEST BOILER (B)

The firing rates were set in relation to special test boilers, according to EN 676 regulations. Figure (B) indicates the diameter and length of the test combustion chamber.

Example:

Output 756 kW:
diameter = 60 cm; length = 2 m.

COMMERCIAL BOILERS

The burner/boiler combination does not pose any problems if the boiler is CE type-approved and its combustion chamber dimensions are similar to those indicated in diagram (B).

If the burner must be combined with a commercial boiler that has not been CE type-approved and/or its combustion chamber dimensions are clearly smaller than those indicated in diagram (B), consult the manufacturer.

RS 70 Δp (mbar)

kW	1	2	3					
			Ø 1" 1/2 3970145	Ø 1" 1/2 3970180	Ø 2" 3970146 3970160	Ø 2" 3970181 3970182	DN 65 3970147 3970161	DN80 3970148 3970162
465	4,2	0,2	11,6	8,5	4,8	5,2	-	-
515	4,8	0,2	13,9	10,0	5,8	6,2	-	-
565	5,6	0,3	16,3	12,0	6,8	7,2	-	-
615	6,4	0,3	18,9	13,5	8,0	8,2	-	-
665	7,3	0,3	21,7	15,0	9,2	9,5	-	-
715	8,3	0,4	24,6	17,2	10,5	10,8	-	-
765	9,3	0,4	27,7	18,5	11,3	11,5	4,4	-
814	10,3	0,4	30,9	20,0	13,2	13,0	5,0	-

RS 100 Δp (mbar)

kW	1	2	3					
			Ø 1" 1/2 3970145	Ø 1" 1/2 3970180	Ø 2" 3970146 3970160	Ø 2" 3970181 3970182	DN 65 3970147 3970161	DN80 3970148 3970162
695	3,7	0,4	23,5	17,0	9,9	10,1	-	-
760	4,2	0,4	27,4	18,5	11,7	11,5	4,4	-
825	5,0	0,5	31,6	20,5	13,6	13,2	5,1	-
890	5,8	0,5	36,1	23,0	15,6	14,0	5,8	-
955	6,5	0,6	40,9	26,0	17,7	16,0	6,6	-
1020	7,3	0,7	45,9	29,0	19,9	18,0	7,5	-
1085	8,3	0,8	51,1	33,0	22,3	20,0	8,4	4,5
1163	9,3	0,8	57,7	38,0	25,3	22,0	9,5	5,0

RS 130 Δp (mbar)

kW	1	2	3					
			Ø 1" 1/2 3970145	Ø 1" 1/2 3970180	Ø 2" 3970146 3970160	Ø 2" 3970181 3970182	DN 65 3970147 3970161	DN80 3970148 3970162
930	3,8	1,0	39,0	22,0	16,9	15,0	6,3	-
1010	4,5	1,1	44,9	28,0	19,6	17,0	7,4	-
1090	5,1	1,3	51,5	33,0	22,5	20,0	8,5	4,5
1170	5,8	1,5	58,3	37,0	25,6	22,0	9,6	5,1
1250	6,5	1,7	65,4	40,0	28,8	25,0	10,8	5,7
1330	7,2	1,8	72,9	43,0	32,2	28,0	12,2	6,4
1410	7,9	1,9	80,7	48,0	35,8	31,0	13,6	7,1
1512	8,6	2,0	91,2	53,0	40,6	34,0	15,3	8,0

(A)

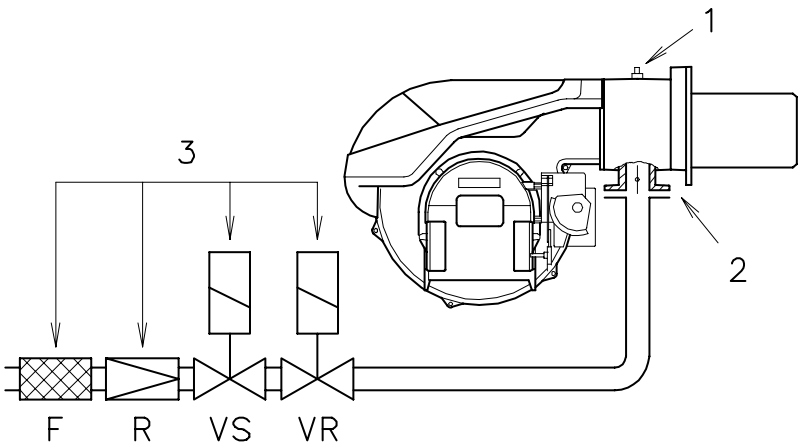

D963 **(B)**

GAS PRESSURE

The adjacent tables show minimum pressure losses along the gas supply line depending on the burner output in 2nd stage operation.

Column 1
Pressure loss at combustion head.
Gas pressure measured at test point 1)(B), with:
- Combustion chamber at 0 mbar
- Burner operating in 2nd stage
- Gas ring 2)(B)p. 7 adjusted as indicated in diagram (C)p. 7.

Column 2
Pressure loss at gas butterfly valve 2)(B) with maximum opening: 90°.

Column 3
Pressure loss of gas train 3)(B) includes: adjustment valve VR, safety valve VS (both fully open), pressure governor R, filter F.

The values shown in the various tables refer to:
natural gas G20 PCI 10 kWh/Nm^3 (8.6 Mcal/Nm^3).
With:
natural gas G25 PCI 8.6 kWh/Nm^3 (7.4 Mcal/Nm^3) multiply tabulated values by 1.3.

Calculate the approximate 2nd stage output of the burner thus:
- subtract the combustion chamber pressure from the gas pressure measured at test point 1)(B).
- Find the nearest pressure value to your result in column 1 of the table for the burner in question.
- Read off the corresponding output on the left.

Example - RS 100:
- 2nd stage operation
- Natural gas G20 PCI 10 kWh/Nm^3
- Gas ring 2)(B)p. 7 adjusted as indicated in diagram (C)p. 7.
- Gas pressure at test point 1)(B) = 8 mbar
- Pressure in combustion chamber = 3 mbar
  8 - 3 = 5 mbar

A 2nd stage output of 825 kW shown in Table RS 100 corresponds to 5 mbar pressure, column 1.
This value serves as a rough guide, the effective delivery must be measured at the gas meter.

To calculate the required gas pressure at test point 1)(B), set the output required from the burner in 2nd stage operation:
- find the nearest output value in the table for the burner in question.
- Read off the pressure at test point 1)(B) on the right in column 1.
- Add this value to the estimated pressure in the combustion chamber.

Example - RS 100:
- Required burner output in 2nd stage operation: 825 kW
- Natural gas G20 PCI 10 kWh/Nm^3
- Gas ring 2)(B)p.7 adjusted as diagram (C)p.7.
- Gas pressure at burner output of 825 kW, taken from table RS 100, column 1 = 5 mbar
- Pressure in combustion chamber = 3 mbar
  5 + 3 = 8 mbar
  pressure required at test point 1)(B).
  4 + 2 = 6 mbar
  pressure required at test point 1)(B).

mm	A	B	C
RS 70	185	275 - 325	M 12
RS 100	185	275 - 325	M 12
RS 130	195	275 - 325	M 12

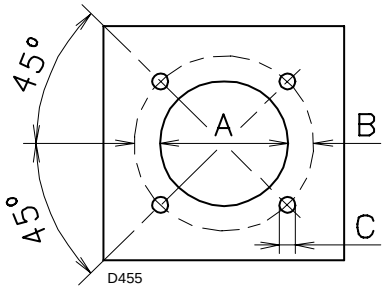

(A)

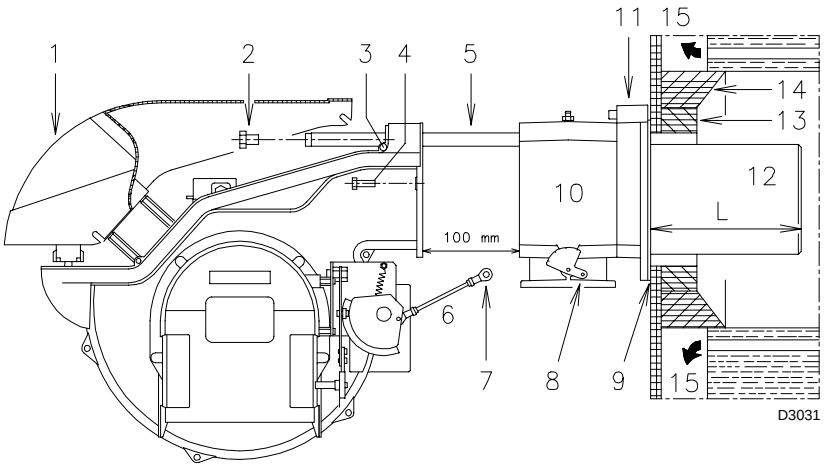

(B)

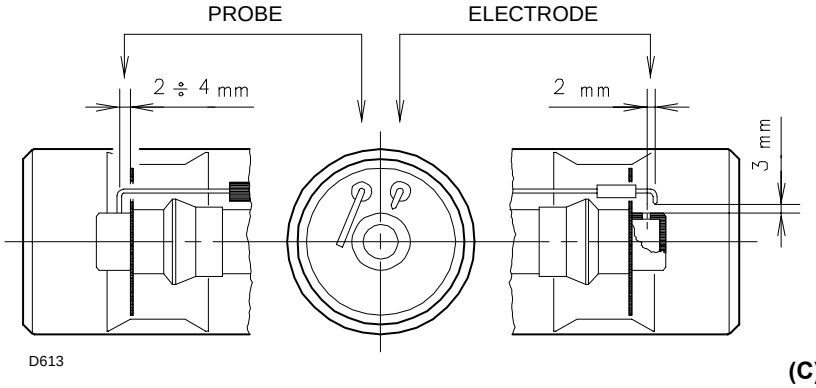

(C)

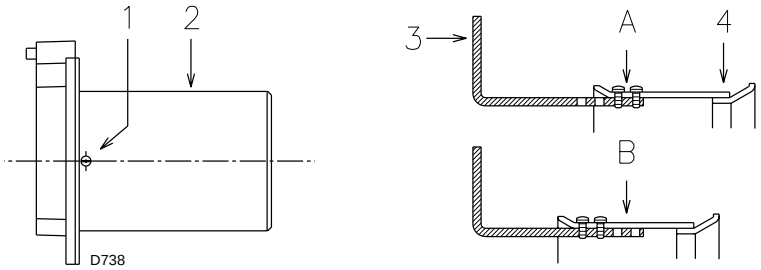

(D)

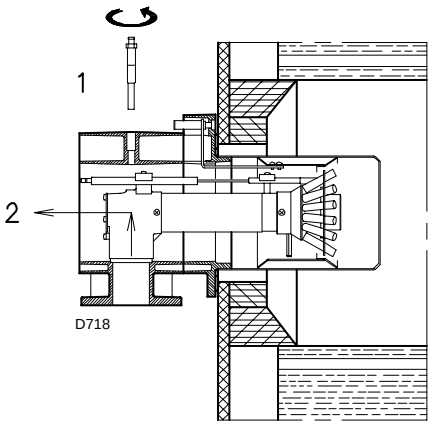

(E)

INSTALLATION

BOILER PLATE (A)

Drill the combustion chamber locking plate as shown in (A). The position of the threaded holes can be marked using the thermal screen supplied with the burner.

BLAST TUBE LENGTH (B)

The length of the blast tube must be selected according to the indications provided by the manufacturer of the boiler, and in any case it must be greater than the thickness of the boiler door complete with its fettling.

Blast tube 12):	**RS 70**	**RS 100**	**RS 130**
• mm	250	250	280

For boilers with front flue passes 15) or flame inversion chambers, protective fettling in refractory material 13) must be inserted between the boiler fettling 14) and the blast tube 12).
This protective fettling must not compromise the extraction of the blast tube.
For boilers having a water-cooled front the refractory fettling 13)-14)(B) is not required unless it is expressly requested by the boiler manufacturer.

SECURING THE BURNER TO THE BOILER (B)

Before securing the burner to the boiler, check through the blast tube opening to make sure that the flame sensor probe and the ignition electrode are correctly set in position, as shown in (C).

Now detach the combustion head from the burner, fig.(B):
- loosen the 4 screws 3) and remove the cover 1)
- Disengage the articulated coupling 7) from the graduated sector 8).
- Remove the screws 2) from the slide bars 5).
- Remove the two screws 4) and pull the burner back on slide bars 5) by about 100 mm.
  Disconnect the wires from the probe and the electrode and then pull the burner completely off the slide bars.

COMBUSTION HEAD CALIBRATION

At this point check, for model RS 130, whether the maximum delivery of the burner in 2nd stage operation is contained in area A or in area B of the firing rate. See page 8.
If it is in area A then no operation is required.
If, on the other hand, it is in area B:
- unscrew the screws 1)(D) and disassemble the blast tube 2).
- Move the fixing of the rod 3)(D) from position A to position B, thereby causing the shutter 4) to retract.
- Now refit the blast tube 2)(D) and the screws 1).

Once this operation has been carried out (if it was required), secure the flange 11)(B) to the boiler plate, interposing the thermal insulating screen 9)(B) supplied with the burner. Use the 4 screws, also supplied with the unit, after first protecting the thread with an anti-locking product.
The seal between burner and boiler must be airtight.

If you noticed any irregularities in positions of the probe or ignition electrode during the check mentioned above, remove screw 1)(E), extract the internal part 2)(E) of the head and proceed to set up the two components correctly.
Do not attempt to turn the probe. Leave it in the position shown in (C) since if it is located too close to the ignition electrode the control box amplifier may be damaged.

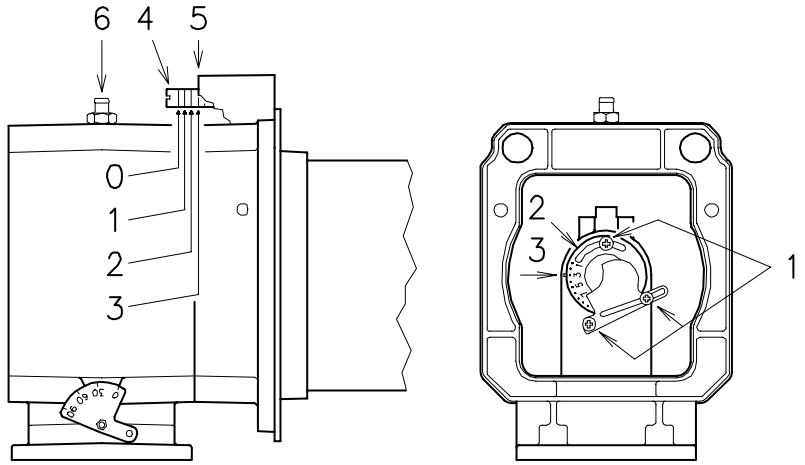

D719

(A) **(B)**

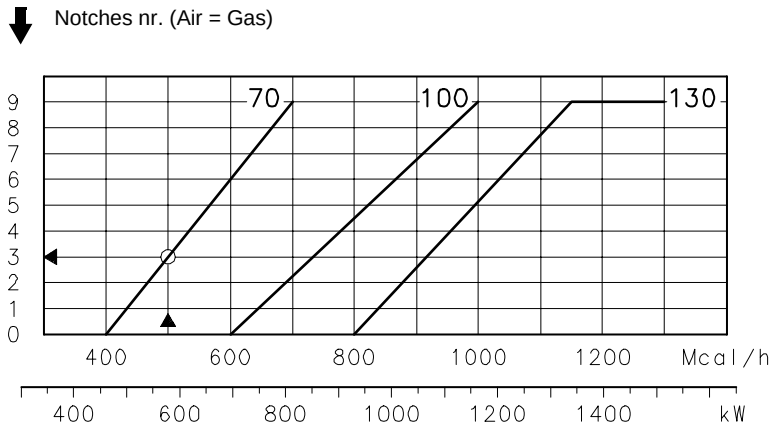

Burner output in 2nd stage operation

(C) D720

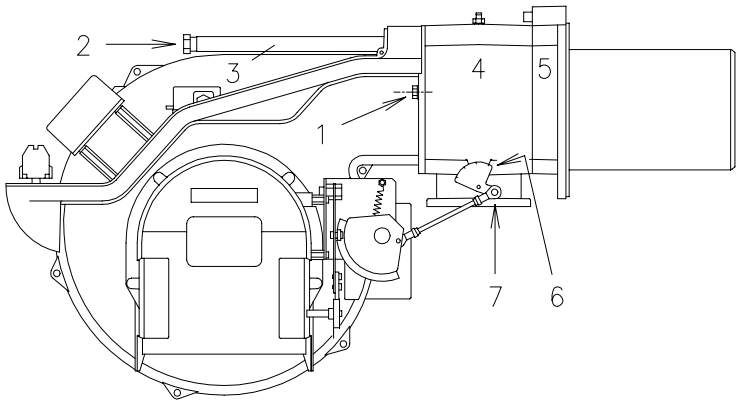

(D) D3032

SETTING THE COMBUSTION HEAD

Installation operations are now at the stage where the blast tube and sleeve are secured to the boiler as shown in fig. (A). It is now a very simple matter to set up the combustion head, as this depends solely on the output developed by the burner in 2nd stage operation.
It is therefore essential to establish this value before proceeding to set up the combustion head.
There are two adjustments to make on the head:
air and gas deliveries.

In diagram (C) find the notch to use for adjusting the air and the gas, and then proceed as follows:

Air adjustment (A)
Turn screw 4)(A) until the notch identified is aligned with the front surface 5)(A) of the flange.
Gas adjustment (B)
Loosen the 3 screws 1)(B) and turn ring 2) until the notch identified is aligned with index 3). Tighten the 3 screws 1) fully down.

Example RS 70:
Burner output = 581 kW (500 Mcal/h).
If we consult diagram (C) we find that for this output, air and gas must be adjusted using notch 3, as shown in figs.(A) and (B).

Note
Diagram (C) shows the ideal settings for the combustion head. If the gas mains pressure is too low to reach the 2nd stage operation pressure indicated on page 5, and if the ring 2)(B) is not fully open, it can be opened wider by 1 or 2 notches.

Continuing with the previous example, page 5 indicates that for burner RS 70 with output of 581 kW (500 Mcal/h) a pressure of approximately 6 mbar is necessary at test point 6)(A). If this pressure cannot be reached, open the ring 2)(B) to notch 4 or 5.
Make sure that the combustion characteristics are satisfactory and free of pulsations.

Once you have finished setting up the head, refit the burner to the slide bars 3)(D) at approximately 100 mm from the sleeve 4)(D) - burner positioned as shown in fig.(B)p.6 - insert the flame detection probe cable and the ignition electrode cable and then slide the burner up to the sleeve so that it is positioned as shown in fig.(D).
Refit screws 2) on slide bars 3).
Secure the burner to the sleeve by tightening screw 1).
Reconnect the articulation 7) to the graduated sector 6).

Important
When fitting the burner on the two slide bars, it is advisable to gently draw out the high tension cable and flame detection probe cable until they are slightly stretched.

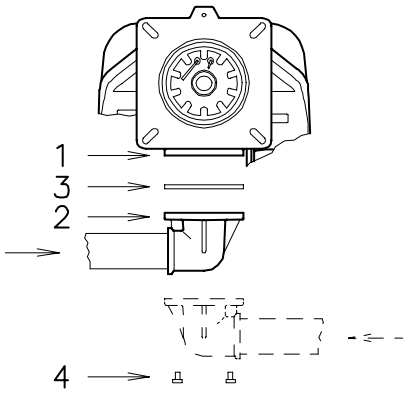

(A) D722

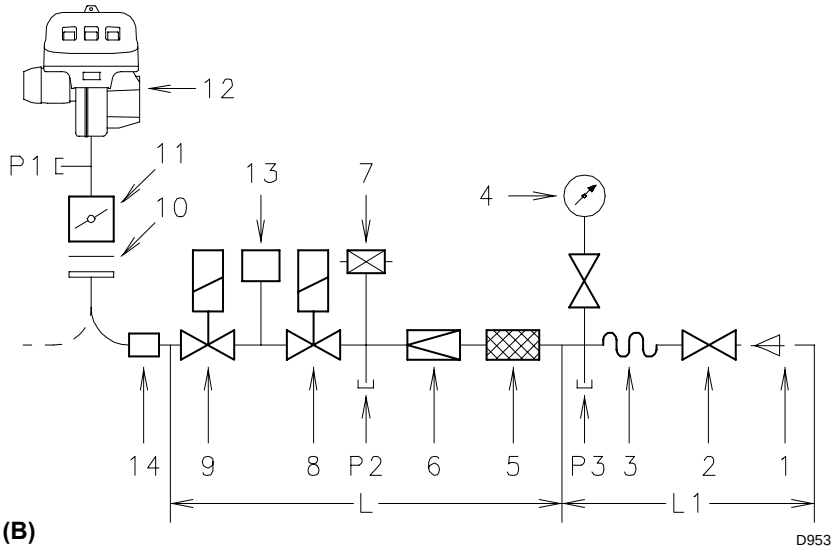

(B) D953

GAS BURNERS AND RELEVANT GAS TRAINS APPROVED ACCORDING TO EN 676

Gas train L			Burner			13	14
Ø	C.T.	Code	RS 70	RS 100	RS 130	Code	Code
1"1/2 1"1/2	- -	3970145 3970180	• •	• •	• •	3010123 3010123	3000843 3000843
2" 2" 2" 2"	- ♦ - ♦	3970146 3970160 3970181 3970182	• • • •	• • • •	• • • •	3010123 - 3010123 -	- - - -
DN 65 DN 65	- ♦	3970147 3970161	• •	• •	• •	3010123 -	3000825 3000825
DN 80 DN 80	– ♦	3970148 3970162	- -	- -	• •	3010123 -	3000826 3000826

(C)

GAS TRAIN COMPONENTS

Code	Components		
	Filter 5	Pressure governor 6	Solenoids 8 - 9
3970145	GF 515/1	FRS 515	DMV-DLE 512/11
3970180	Multiblock MB DLE 415		
3970146 3970160	GF 520/1	FRS 520	DMV-DLE 520/11
3970181 3970182	Multiblock MB DLE 420		
3970147 3970161	GF 40065/3	FRS 5065	DMV-DLE 5065/11
3970148 3970162	GF 40080/3	FRS 5080	DMV-DLE 5080/11

GAS LINE

- The gas train must be connected to the gas attachment 1)(A), using flange 2), gasket 3) and screws 4) supplied with the burner.
- The gas train can enter the burner from the right or left side, depending on which is the most convenient, see fig.(A).
- Gas solenoids 8)-9)(B) must be as close as possible to the burner to ensure gas reaches the combustion head within the safety time range of 3 s.
- Make sure that the pressure governor calibration range (colour of the spring) comprises the pressure required by the burner.

GAS TRAIN (B)

It is type-approved according to EN 676 Standards and is supplied separately from the burner with the code indicated in Table (C).

KEY (B)

1 - Gas input pipe
2 - Manual valve
3 - Vibration damping joint
4 - Pressure gauge with pushbutton cock
5 - Filter
6 - Pressure governor (vertical)
7 - Minimum gas pressure switch
8 - Safety solenoid VS (vertical)
9 - Adjustment solenoid VR (vertical)
Two adjustments:
• ignition delivery (rapid opening)
• maximum delivery (slow opening)
10 - Standard issue burner gasket with flange
11 - Gas adjustment butterfly valve
12 - Burner
13 - Gas valve 8)-9) leak detection control device.
In accordance with EN 676 Standards, gas valve leak detection control devices are compulsory for burners with maximum outputs of more than 1200 kW; therefore only for model RS 130.
14 - Gas train/burner adaptor.

P1 - Pressure at combustion head
P2 - Pressure down-line from the pressure governor
P3 - Pressure up-line from the filter

L - Gas train supplied separately with the code indicated in Table (C)
L1 - The responsibility of the installer

KEY TO TABLE (C)

C.T.=Gas valves 8) - 9) leak detection control devices:
- = Gas train without gas valve leak detection control device; device that can be ordered separately and assembled subsequently (see Column 13).
♦= Gas train with assembled VPS valve leak detection control device.

13 = VPS valve leak detection control device. Supplied separately from gas train on request.
14 = Gas train/burner adaptor. Supplied separately from gas train on request.

Note

See the accompanying instructions for the adjustment of the gas train.

ELECTRICAL EQUIPMENT FACTORY-SET
RS 70 - RS 100 - RS 130

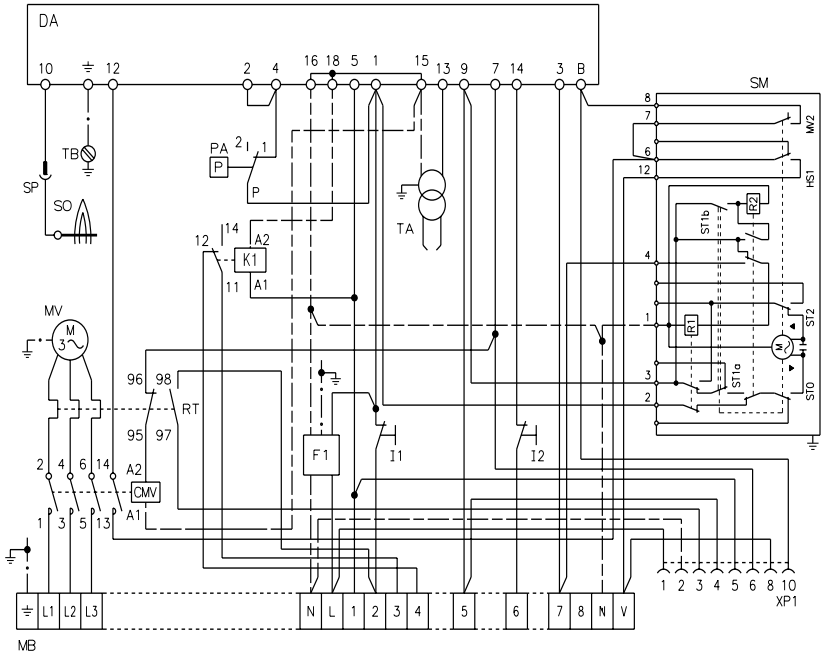

(A) D3055

ELECTRICAL SYSTEM

ELECTRICAL SYSTEM as set up by the manufacturer

LAYOUT (A)
Burners RS 70 - RS 100 - RS 130

- Models RS 70 - RS 100 - RS 130 leave the factory preset for **400 V** power supply.
- If **230 V** power supply is used, change the motor connection from star to delta and change the setting of the thermal cut-out as well.

Key to Layout (A)

CMV	- Motor contactor
DA	- Control box (Landis RMG)
F1	- Protection against radio interference
K1	- Relay
I1	- Switch: burner off - on
I2	- Switch: 1st - 2nd stage operation
MB	- Burner terminal strip
MV	- Fan motor
PA	- Air pressure switch
RT	- Thermal cut-out
SM	- Servomotor
SO	- Ionisation probe
SP	- Plug-socket
TA	- Ignition transformer
TB	- Burner ground
XP1	- Connector for STATUS

ATTENTION
In the case of phase-phase feed, a bridge must be fitted on the control box terminal strip between terminal 6 and the earth terminal.

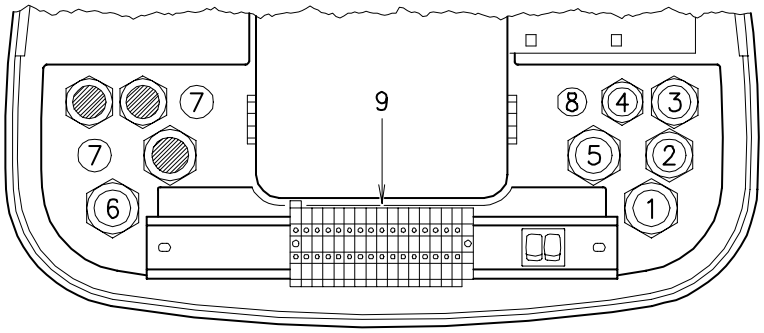

(A) D955

RS 70 - RS 100 - RS 130 without leak detection control device

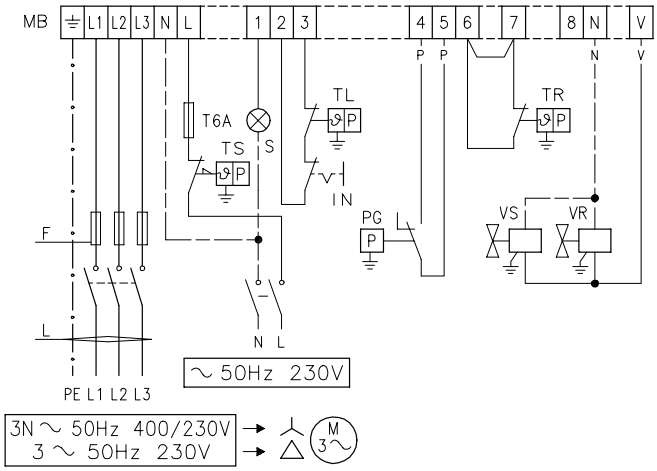

(B) D956

RS 70 - RS 100 - RS 130 with leak detection control device VPS

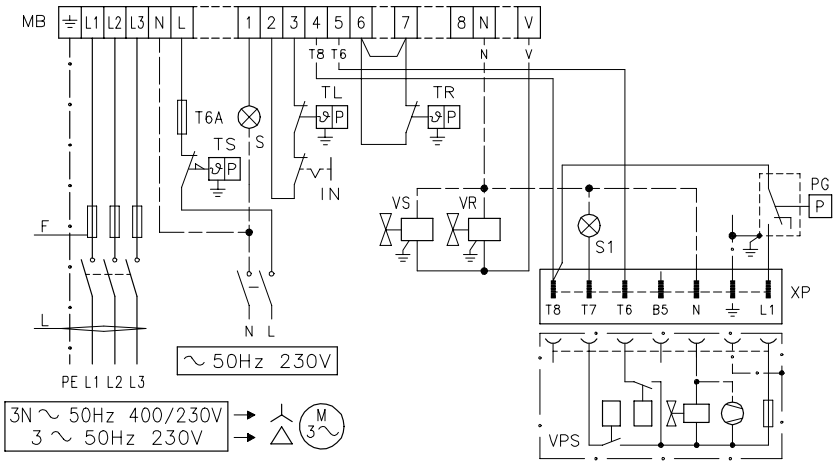

(C) D957

		RS 70		RS 100		RS 130	
		230 V	400 V	230 V	400 V	230 V	400 V
F	A	T10	T6	T16	T10	T16	T10
L	mm^2	1,5	1,5	1,5	1,5	1,5	1,5

(D)

ELECTRICAL CONNECTIONS

Use flexible cables according to EN 60 335-1 Regulations:

- if in PVC sheath, use at least H05 VV-F
- if in rubber sheath, use at least H05 RR-F.

All the wires to connect to the burner terminal strip 9)(A) must enter through the supplied fair-leads.

The fairleads and hole press-outs can be used in various ways; the following lists show one possible solution:

1 -	Pg 13,5	Three-phase power supply
2 -	Pg 11	Single-phase power supply
3 -	Pg 11	Remote control device TL
4 -	Pg 9	Remote control device TR
5 -	Pg 13,5	Gas valves
6 -	Pg 13,5	Gas pressure switch or gas valve leak detection control device
7 -	Pg 11	Open the hole, if a pipe union is to be added
8 -	Pg 9	Open the hole, if a pipe union is to be added

LAYOUT (B)

Electrical connection RS 70 - 100 - 130 burners without leak detection control device.

LAYOUT (C)

Electrical connection RS 70 - 100 - 130 burners with VPS leak detection control device.

Gas valve leak detection control takes place immediately before every burner start-up.

Fuses and cables cross-section layouts (B) and (C), see table (D).

Cross-section when not indicated: 1,5 mm^2.

KEY TO LAYOUTS (B - C)

IN - Burner manual stop switch
XP - Plug for leak detection control device
MB - Burner terminal strip
PG - Min. gas pressure switch
S - Remote lock-out signal
S1 - Remote lock-out signal of leak detection control device
TR - High-low mode load remote control system: controls operating stages 1 and 2.
If the burner is to be set up for single stage operation, replace of remote control device TR with a jumper.
TL - Load limit remote control system:
shuts down the burner when the boiler temperature or pressure reaches the preset value.
TS - Safety load control system:
operates when TL is faulty
VR - Adjustment valve
VS - Safety valve

CALIBRATION OF THERMAL RELAY

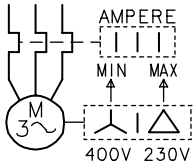

(A) D867

LAYOUT (A)
Calibration of thermal cut-out 7)(A)p. 3
This is required to avoid motor burn-out in the event of a significant increase in power absorption caused by a missing phase.

- If the motor is star-powered, **400 V**, the cursor should be positioned to "MIN".
- If the motor is delta-powered, **230 V**, the cursor should be positioned to "MAX".

Even if the scale of the thermal cut-out does not include rated motor absorption at 400 V, protection is still ensured in any case.

N.B.

- The RS 70-100-130 burners leave the factory preset for 400 V power supply. If 230 V power supply is used, change the motor connection from star to delta and change the setting of the thermal cut-out as well.
- The RS 70-100-130 burners have been type-approved for intermittent operation. This means they should compulsorily be stopped at least once every 24 hours to enable the control box to check its own efficiency at start-up. Burner halts are normally provided for automatically by the boiler load control system.
  If this is not the case, a time switch should be fitted in series to IN to provide for burner shut-down at least once every 24 hours.
- The RS 70-100-130 burners are factory set for two-stage operation and must therefore be connected to control device TR.
  Alternatively, if single stage operation is required, instead of control device TR install a jumper lead between terminals 6 and 7 of the terminal strip.

WARNING: Do not invert the neutral with the phase wire in the electricity supply line. Inverting the wires will make the burner go into lock-out because of firing failure.

MIN GAS PRESSURE SWITCH AIR PRESSURE SWITCH

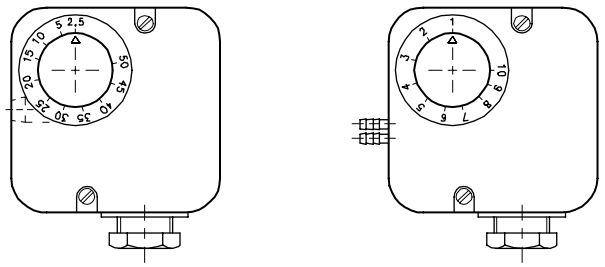

(A) (B) D897

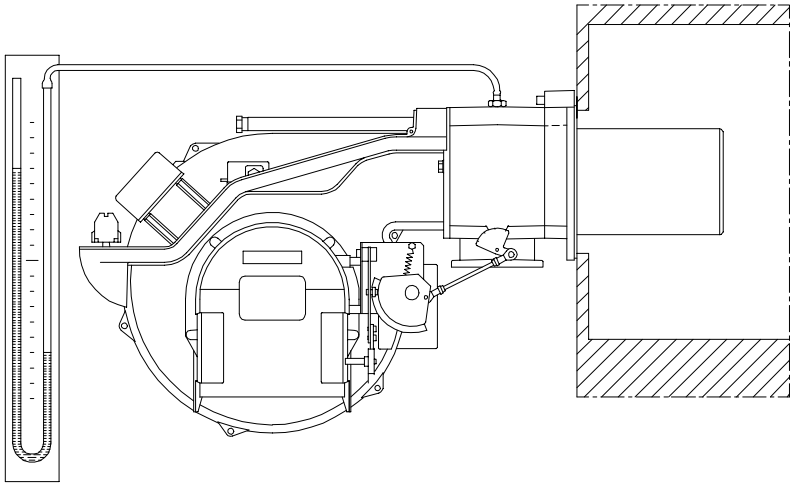

(C) D3033

SERVOMOTOR

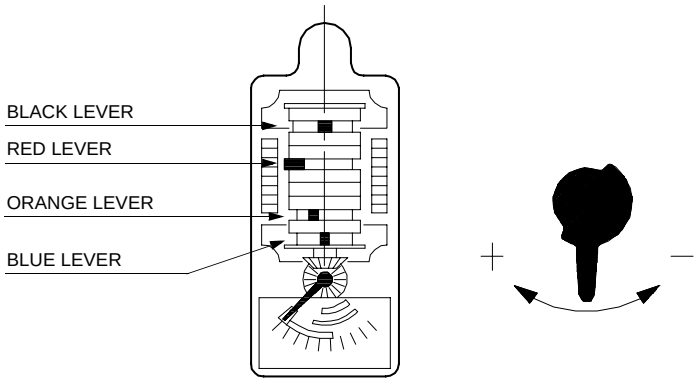

(D) D728

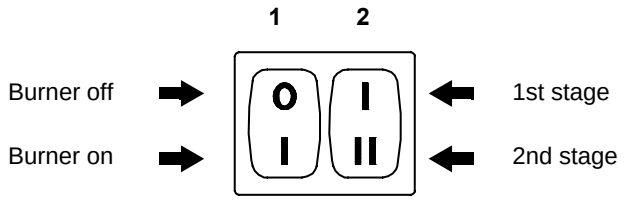

(E) D469

ADJUSTMENTS BEFORE FIRST FIRING

Adjustment of the combustion head, and air and gas deliveries has been illustrated on page 7.
In addition, the following adjustments must also be made:

- open manual valves up-line from the gas train.
- Adjust the minimum gas pressure switch to the start of the scale (A).
- Adjust the air pressure switch to the zero position of the scale (B).
- Purge the air from the gas line.
  Continue to purge the air (we recommend using a plastic tube routed outside the building) until gas is smelt.
- Fit a U-type manometer (C) to the gas pressure test point on the sleeve.
  The manometer readings are used to calculate the 2nd stage operation burner power using the tables on page 5.
- Connect two lamps or testers to the two gas line solenoid valves VR and VS to check the exact moment at which voltage is supplied.
  This operation is unnecessary if each of the two solenoid valves is equipped with a pilot light that signals voltage passing through.

Before starting up the burner it is good practice to adjust the gas train so that ignition takes place in conditions of maximum safety, i.e. with gas delivery at the minimum.

SERVOMOTOR (D)

The servomotor provides simultaneous adjustment of the air gate valve, by means of the variable profile cam, and the gas butterfly valve.
The angle of rotation of the servomotor is equal to the angle on the graduated sector controlling the gas butterfly valve. The servomotor rotates through 90 degrees in 15 seconds.
Do not alter the factory setting for the 4 levers; simply check that they are set as indicated below:

RED LEVER : 90°
Limits rotation toward maximum position. When the burner is in 2nd stage operation the gas butterfly valve must be fully open: 90°.

BLUE LEVER : 0°
Limits rotation toward the minimum position. When the burner is shut down the air gate valve and the gas butterfly valve must be closed: 0°.

ORANGE LEVER : 15°
Adjusts the ignition position and the output in 1st stage operation.

BLACK LEVER : 85°
Lights up the 2nd stage LED (STATUS).
A graduated plate with 4 coloured sectors marks the lever operation point.

BURNER STARTING

Close the control devices and set:

- switch 1)(E) to "Burner ON" position;
- switch 2)(E) to "1st STAGE" position.

As soon as the burner starts check the direction of rotation of the fan blade, looking through the flame inspection window 13)(A)p.3.
Make sure that the lamps or testers connected to the solenoids, or pilot lights on the solenoids themselves, indicate that no voltage is present. If voltage is present, then **immediately** stop the burner and check electrical connections.

BURNER FIRING

Having completed the checks indicated in the previous heading, the burner should fire. If the motor starts but the flame does not appear and the control box goes into lock-out, reset and wait for a new firing attempt.
If firing is still not achieved, it may be that gas is not reaching the combustion head within the safety time period of 3 seconds.
In this case increase gas firing delivery.
The arrival of gas at the sleeve is indicated by the U-type manometer (C).
Once the burner has fired, now proceed with global calibration operations.

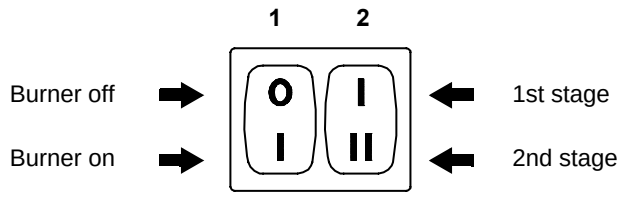

(A) D469

BURNER CALIBRATION
The optimum calibration of the burner requires an analysis of the flue gases at the boiler outlet.

Adjust successively:
1 - First firing output
2 - 2nd stage burner output
3 - 1st stage burner output
4 - Intermediate outputs between 1st and 2nd stage
5 - Air pressure switch
6 - Minimum gas pressure switch

1 - FIRING OUTPUT
According to EN 676 Regulations:

Burners with max. output up to 120 kW
Firing can be performed at the maximum operation output level. Example:
• Max. operation output : 120 kW
• Max. firing output : 120 kW

Burners with max. output above 120 kW
Firing must be performed at a lower output than the max. operation output. If the firing output does not exceed 120 kW, no calculations are required. If firing output exceeds 120 kW, the regulations prescribe that the value be defined according to the control box safety time "ts":
- for "ts" = 2s, firing output must be equal to or lower than 1/2 of max. operation output.
- For "ts" = 3s, firing output must be equal to or lower than 1/3 of max. operation output.

Example: MAX operation output of 600 kW.
Firing output must be equal to or lower than:
• 300 kW with "ts" = 2s
• 200 kW with "ts" = 3s

In order to measure the firing output:
- disconnect the plug-socket 8)(A)p.3 on the ionization probe cable (the burner will fire and then go into lock-out after the safety time has elapsed).
- Perform 10 firings with consecutive lock-outs.
- On the meter read the quantity of gas burned. This quantity must be equal to or lower than the quantity given by the formula, for ts = 3s:

$$\frac{\mathbf{Nm^3/h}\ \text{(max. burner delivery)}}{\mathbf{360}}$$

Example: for G 20 gas (10 kWh/Nm^3):
Max. operation output: 600 kW corresponding to 60 Nm^3/h.
After 10 firings with lock-outs, the delivery read on the meter must be equal to or lower than:
60 : 360 = 0,166 Nm^3.

2 - 2ND STAGE OUTPUT
2nd stage output of the burner must be set within the firing rate range shown on page 4.
In the above instructions we left the burner running in 1st stage operation. Now set switch 2)(A) to the 2nd stage position: the servomotor will open, simultaneously, the air gate valve and the gas butterfly valve to 90°.

Gas calibration
Measure the gas delivery at the meter.
A guideline indication can be calculated from the tables on page 5, simply read off the gas pressure on the U-type manometer, see fig.(C) on page 12, and follow the instructions on page 5.
- If delivery needs to be reduced, diminish outlet gas pressure and, if it is already very low, slightly close adjustment valve VR.
- If delivery needs to be increased, increase outlet gas pressure.

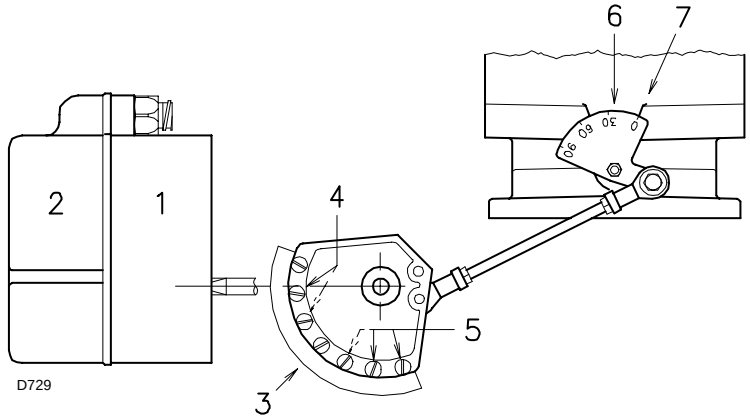

1 Servomotor

2 Cam cover

3 Adjustable profile cam

4 Cam starting profile adjustment screws

5 Cam end profile adjustment screws

6 Graduated sector for gas butterfly valve

7 Index for graduated sector 6

(A)

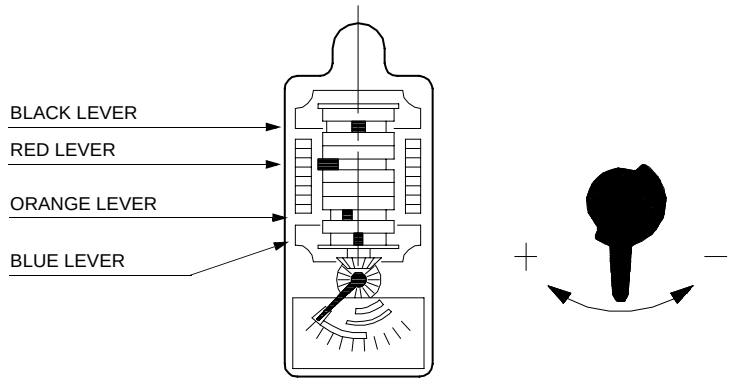

(B)

Adjusting air delivery

Progressively adjust the end profile of cam 3)(A) by turning the screws 5).

- Turn the screws clockwise to increase air delivery.
- Turn the screws counter-clockwise to reduce air delivery.

3 - 1ST STAGE OUTPUT

Burner power in 1st stage operation must be selected within the firing rate range shown on page 4.

Set the switch 2)(A)p.13 to the 1st stage position: the servomotor 1)(A) will close the air gate valve and, at the same time, closes the gas butterfly valve down to 15°, i.e. down to the original factory setting.

Adjusting gas delivery

Measure the delivery of gas from the gas meter.

- If this value is to be reduced, decrease the angle of the orange lever (B) slightly by proceeding a little at a time until the angle is changed from 15° to 13° or 11°....
- If it is necessary to increase the mains pressure, move to 2nd stage operation by altering the setting of switch 2)(A)p.13 and increase the angle of the orange lever, proceeding a little at a time until the angle is changed from 15° to 17° - 19°....
  At this point return to 1st stage operation and measure gas delivery.

Note

The servomotor follows the adjustment of the orange lever only when the angle is reduced.

If, however the angle must be increased, switch to 2nd stage operation, increase the angle and then return to 1st stage operation to check the effect of the adjustment.

Adjustment of air delivery

Progressively adjust the starting profile of cam 3)(A) by turning the screws 4). It is preferable not to turn the first screw since this is used to set the air gate valve to its fully-closed position.

4 - INTERMEDIATE OUTPUTS

Adjustment of gas delivery

No adjustment of gas delivery is required.

Adjustment of air delivery

Switch off the burner using switch 1)(A)p.13 and turn the central screws of the cam so that the cam offers a progressive gradient.

Do not alter the position of the screws at each end of the cam track, which have already been adjusted for 1st and 2nd stage air gate valve control.

Note

Once you have finished adjusting outputs 2ND STAGE - 1ST STAGE - INTERMEDIATE, check ignition once again: noise emission at this stage must be identical to the following stage of operation.

If you notice any sign of pulsations, reduce the ignition stage delivery.

AIR PRESSURE SWITCH 14)(A)p. 3

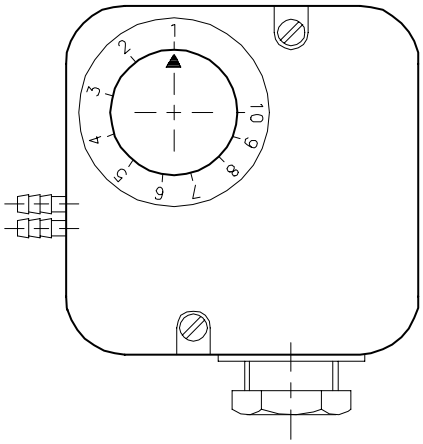

(A) D521

MIN GAS PRESSURE SWITCH 7)(B)p. 8

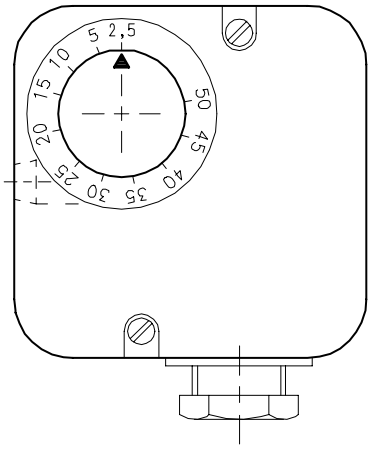

(B) D896

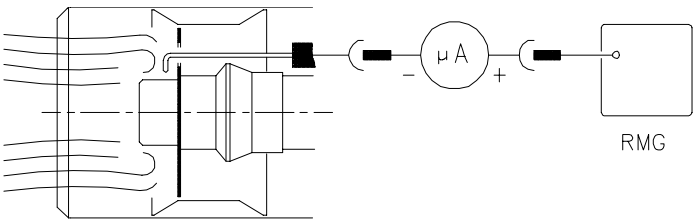

(C) D3023

5 - AIR PRESSURE SWITCH (A)

Adjust the air pressure switch after having performed all other burner adjustments with the air pressure switch set to the start of the scale (A).
With the burner operating in 1st stage, increase adjustment pressure by slowly turning the relative knob clockwise until the burner locks out.
Then turn the knob anti-clockwise by about 20% of the set point and repeat burner starting to ensure it is correct.
If the burner locks out again, turn the knob anti-clockwise a little bit more.

Attention

As a rule, the air pressure switch must limit the CO in the fumes to less than 1% (10,000 ppm).
To check this, insert a combustion analyser into the chimney, slowly close the fan suction inlet (for example with cardboard) and check that the burner locks out, before the CO in the fumes exceeds 1%.

The air pressure switch may operate in "differential" operation in two pipe system. If a negative pressure in the combustion chamber during pre-purging prevents the air pressure switch from switching, switching may be obtained by fitting a second pipe between the air pressure switch and the suction inlet of the fan. In such a manner the air pressure switch operates as differenzial pressure switch.

Warning

The use of the air pressure switch with differential operation is allowed only in industrial applications and where rules enable the air pressure switch to control only fan operation without any reference to CO limit.

6 - MINIMUM GAS PRESSURE SWITCH (B)

Adjust the minimum gas pressure switch after having performed all the other burner adjustments with the pressure switch set at the start of the scale (B).
With the burner operating in 2nd stage, increase adjustment pressure by slowly turning the relative knob clockwise until the burner locks out.
Then turn the knob anti-clockwise by 2 mbar and repeat burner starting to ensure it is uniform.
If the burner locks out again, turn the knob anti-clockwise again by 1 mbar.

FLAME PRESENT CHECK (C)

The burner is fitted with an ionisation system which ensures that a flame is present. The minimum current for plant operation is 5 µA.
The burner provides a much higher current, so that controls are not normally required. However, if it is necessary to measure the ionisation current, disconnect the plug-socket 8)(A)p.3 on the ionisation probe cable and insert a direct current microamperometer with a base scale of 100 µA.
Carefully check polarities!

NORMAL FIRING
(n° = seconds from instant 0)

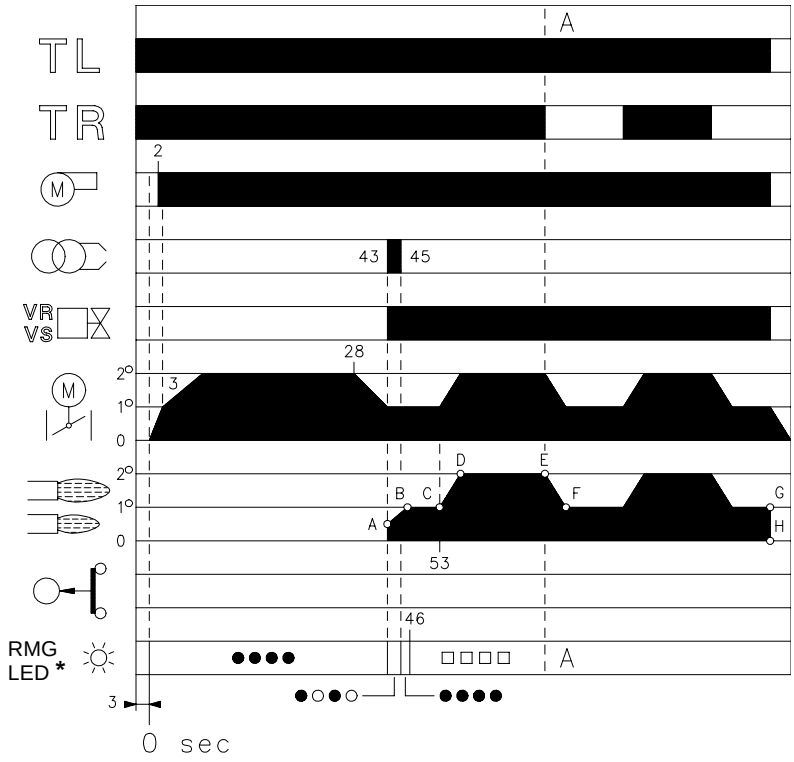

* ○ Off ● Yellow □ Green ▲ Red
For further details see page 18.

(A) D3051

NO FIRING

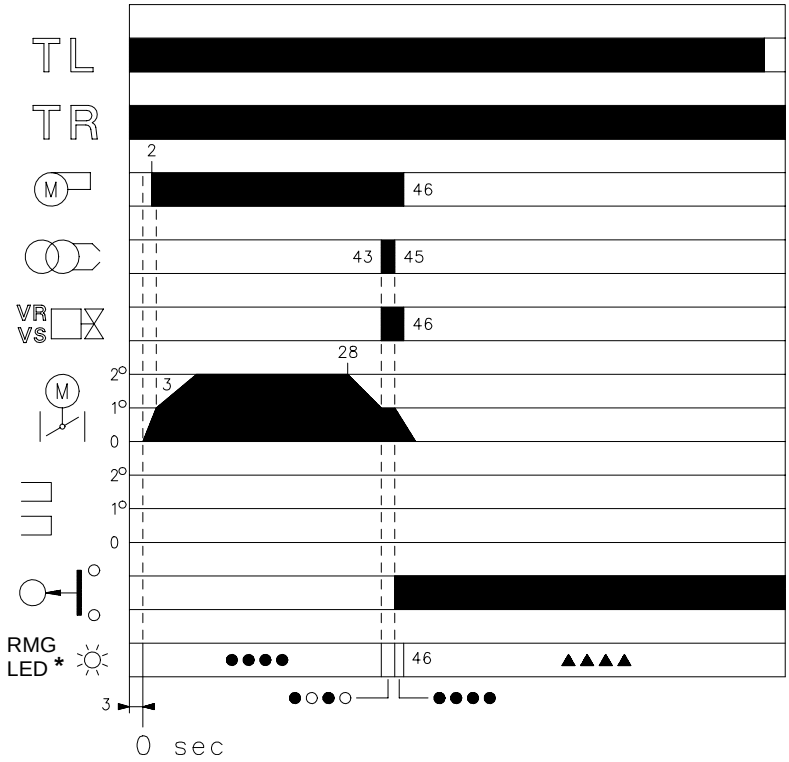

* ○ Off ● Yellow ▲ Red
For further details see page 18.

(B) D3052

BURNER OPERATION

BURNER STARTING (A)

- : Control device TL closes.
  Servomotor starts: it rotates during opening up to the angle set on cam with orange lever.
  After about 3s:
- 0 s : The control box starting cycle begins.
- 2 s : Fan motor starts.
- 3 s : Servomotor starts: it rotates during opening until contact is made on cam with red lever.
  The air gate valve is positioned to 2nd stage output.
  Pre-purge stage with air delivery at 2nd stage output.
  Duration 25 seconds.
- 28 s : Servomotor starts: it rotates during closing up to the angle set on cam with orange lever.
- 43 s : The air gate valve and the gas butterfly are positioned to 1st stage output.
  Ignition electrode strikes a spark.
  Safety valve VS and adjustment valve VR (rapid opening) open. The flame is ignited at a low output level, point A. Output is then progressively increased, with the valve opening slowly up to 1st stage output, point B.
- 45 s : The spark goes out.
- 53 s : If remote control device TR is closed or if it has been replaced by a jumper, the servomotor will continue to turn until the cam with red lever come into operation, setting the air gate valve and the gas butterfly valve to the 2nd stage operation position, section C-D.
  The control box starting cycle ends.

STEADY STATE OPERATION (A)

System equipped with one control device TR.
Once the starting cycle has come to an end, control of the servomotor passes on to the control device TR that controls boiler temperature or pressure, point D.
(The control box will continue, however, to monitor flame presence and the correct position of the air pressure switch).

- When the temperature or the pressure increases until the control device TR opens, the servomotor closes the gas butterfly valve and the air gate valve and the burner passes from the 2nd to the 1st stage of operation, section E-F.
- When the temperature or pressure decreases until the control device TR closes, the servomotor opens the gas butterfly valve and the air gate valve and the burner passes from the 1st to the 2nd stage of operation, and so on.
- The burner stops when the demand for heat is less than the amount of heat delivered by the burner in the 1st stage, section G-H. Control device TL now opens, the servomotor returns toward the 0° position, limited in this movement by cam with blue lever. The air gate valve closes completely to reduce heat losses to a minimum.

Systems not equipped with control device TR (jumper wire installed)
The burner is fired as described in the case above. If the temperature or pressure increase until control device TL opens, the burner shuts down (Section A-A in the diagram).

FIRING FAILURE (B)

If the burner does not fire, it goes into lock-out within 3 s of the opening of the gas solenoid valve and 49 s after the closing of control device TL. The control box red pilot light will light up.

BURNER FLAME GOES OUT DURING OPERATION

If the flame should accidentally go out during operation, the burner will lock out within 1s.

FLAME INSPECTION WINDOW

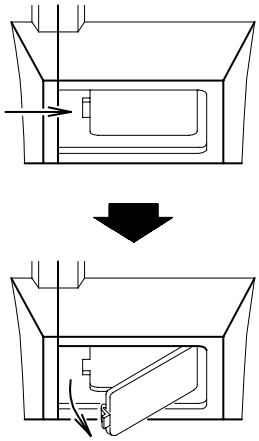

(A) D709

OPENING THE BURNER

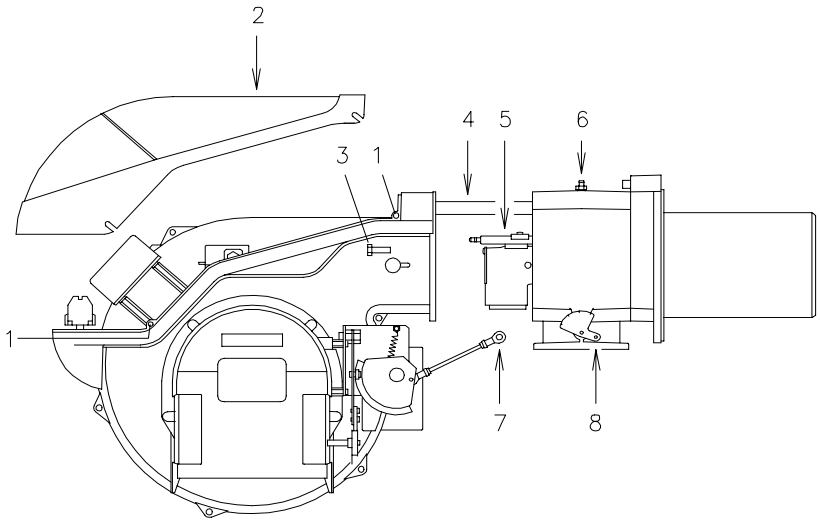

(B) D3034

FINAL CHECKS (with burner running)
- Disconnect one of the wires on the minimum gas pressure switch:
- Open remote control device TL:
- Open remote control device TS:

the burner must stop

- Disconnect the common wire P from the air pressure switch:
- Disconnect the ionisation probe lead:

the burner must lock out

- Make sure that the mechanical locking systems on the various adjustment devices are fully tightened.

MAINTENANCE

Combustion
The optimum calibration of the burner requires an analysis of the flue gases. Significant differences with respect to the previous measurements indicate the points where more care should be exercised during maintenance.

Gas leaks
Make sure that there are no gas leaks on the pipework between the gas meter and the burner.

Gas filter
Change the gas filter when it is dirty.

Flame inspection window
Clean the flame inspection window (A).

Combustion head
Open the burner and make sure that all components of the combustion head are in good condition, not deformed by the high temperatures, free of impurities from the surroundings and correctly positioned. If in doubt, disassemble the elbow fitting 5)(B).

Burner
Check for excess wear or loose screws in the mechanisms controlling the air gate valve and the gas butterfly valve. Also make sure that the screws securing the electrical leads in the burner terminal strip are fully tightened.
Clean the outside of the burner, taking special care with the transmission joints and cam 3)(A)p.14.

Combustion
Adjust the burner if the combustion values found at the beginning of the operation do not comply with the regulations in force, or at any rate, do not correspond to good combustion. Use the appropriate card to record the new combustion values; they will be useful for subsequent controls.

TO OPEN THE BURNER (B):
- switch off the electrical power.
- Loosen screws 1) and withdraw cover 2).
- Disengage the articulated coupling 7) from the graduated sector 8).
- Fit the two standard supplied extensions onto the slide bars 4) (models with 385-415 mm blast tube).
- Remove screws 3), and pull the burner back by about 100 mm on the slide bars 4). Disconnect the probe and electrode leads and then pull the burner fully back.

Now extract the gas distributor 5) after having removed the screw 6).

TO CLOSE THE BURNER (B):
- push the burner until it is about 100 mm from the sleeve.
- Re-connect the leads and slide in the burner until it comes to a stop.
- Refit screws 3), and pull the probe and electrode leads gently out until they are slightly stretched.
- Re-couple the articulated coupling 7) to the graduated sector 8).
- Remove the two extensions from the slide bars 4).

BURNER START-UP CYCLE DIAGNOSTICS

During start-up, indication is according to the followin table:

COLOUR CODE TABLE	
Sequences	**Colour code**
Pre-purging	●●●●●●●●●
Ignition phase	●○●○●○●○●
Operation, flame ok	□□□□□□□□□
Operating with weak flame signal	□○□○□○□○□
Electrical supply lower than ~ 170V	●▲●▲●▲●▲●
Lock-out	▲▲▲▲▲▲▲▲▲
Extraneous light	▲□▲□▲□▲□▲
Key: ○ Off ● Yellow □ Green ▲ Red	

RESETTING THE CONTROL BOX AND USING DIAGNOSTICS

The control box features a diagnostics function through which any causes of malfunctioning are easily identified (indicator: **RED LED**).
To use this function, you must wait at least 10 seconds once it has entered the safety condition (**lock-out**), and then press the reset button.
The control box generates a sequence of pulses (1 second apart), which is repeated at constant 3-second intervals.
Once you have seen how many times the light pulses and identified the possible cause, the system must be reset by holding the button down for between 1 and 3 seconds.

RED LED on wait at least 10s	Lock-out	Press reset for > 3s	Pulses	Interval 3s	Pulses
			● ● ● ● ●		● ● ● ● ●

The methods that can be used to reset the control box and use diagnostics are given below.

RESETTING THE CONTROL BOX

To reset the control box, proceed as follows:

- Hold the button down for between 1 and 3 seconds.
  The burner restarts after a 2-second pause once the button is released.
  If the burner does not restart, you must make sure the limit thermostat is closed.

VISUAL DIAGNOSTICS

Indicates the type of burner malfunction causing lock-out.
To view diagnostics, proceed as follows:

- Hold the button down for more than 3 seconds once the red LED (burner lock-out) remains steadily lit.
  A yellow light pulses to tell you the operation is done.
  Release the button once the light pulses. The number of times it pulses tells you the cause of the malfunction, according to the coding system indicated in the table on page 19.

SOFTWARE DIAGNOSTICS

Reports burner life by means of an optical link with the PC, indicating hours of operation, number and type of lock-outs, serial number of control box etc ...
To view diagnostics, proceed as follows:

- Hold the button down for more than 3 seconds once the red LED (burner lock-out) remains steadily lit.
  A yellow light pulses to tell you the operation is done.
  Release the button for 1 second and then press again for over 3 seconds until the yellow light pulses again.
  Once the button is released, the red LED will flash intermittently with a higher frequency: only now can the optical link be activated.

Once the operations are done, the control box's initial state must be restored using the resetting procedure described above.

BUTTON PRESSED FOR	CONTROL BOX STATUS
Between 1 and 3 seconds	Control box reset without viewing visual diagnostics.
More than 3 seconds	Visual diagnostics of lock-out condition: (LED pulses at 1-second intervals).
More than 3 seconds starting from the visual diagnostics condition	Software diagnostics by means of optical interface and PC (hours of operation, malfunctions etc. can be viewed)

The sequence of pulses issued by the control box identifies the possible types of malfunction, which are listed in the table on page 19.

SIGNAL	FAULT	PROBABLE CAUSE	SUGGESTED REMEDY
2 x blinks ● ●	After pre-purge and safety time, the burner goes tolock-out and the flame does not appear	1 - The solenoid VR allows little gas through 2 - Solenoid valves VR or VS fail to open 3 - Gas pressure too low 4 - Ignition electrode wrongly adjusted 5 - Electrode grounded due to brocken insulation 6 - High voltage cable defective 7 - High voltage cable deformed by high temperature 8 - Ignition trasformer defective 9 - Erroneous valve or trasformer electrical connections 10 - Control box defective 11 - A cock down-line of the gas train is closed 12 - Air in pipework 13 - VS and VR gas valves unconnected or with interrupted coil	Increase Renew the coil or rectifier panel Increase pressure at governor Adjust, see fig. (C)p. 6 Replace Replace Replace and protect Replace Check Replace Open Bleed air Check connections or replace coil
3 x blinks ● ● ●	The burner does not start and lock-out warning appears	14 - Air pressure switch in operating position	Adjust or replace
	The burner starts and then locks out	Air pressure switch inoperative due to insufficient air pressure: 15 - Air pressure switch adjusted badly 16 - Pressure switch pressure point pipe blocked 17 - Head wrongly adjusted 18 - High negative draft in chamber	 Adjust or replace Clean Adjust Connect air pressure switch to fan suction inlet
	Lock-out during pre-purging	19 - Defective motor remote control switch 20 - Defective electrical motor 21 - Motor protection tripped	Replace Replace Reset thermal cut-out when third phase is re-connected
4 x blinks ● ● ● ●	The burner starts and then locks out	22 - Flame simulation	Replace control box
	Lock out when burner stops	23 - Flame remains in combustion head or flame simulation	Eliminate persistence of flame or replace control box
7 x blinks ● ● ● ● ● ● ●	The burner goes to lock-out right after flame appearance	24 - The solenoid VR allows little gas through 25 - Ionisation probe wrongly adjusted 26 - Insufficient ionisation (less than 5 μA) 27 - Probe grounded 28 - Burner poorly grounded 29 - Phase and neutral wires inverted 30 - Defective control box	Increase Adjust, see fig. (C)p. 6 Check probe position Withdraw or replace cable Check grounding Correct by interventing Replace
	Burner locks out at transition between 1st and 2nd stage or between 2nd and 1st stage	31 - Too much air or too little gas	Adjust air and gas
	During operation, the burner stops in lock out	32 - Probe or ionisation cable grounded 33 - Fault on air pressure switch	Replace worn parts Replace
10 x blinks ● ● ● ● ● ● ● ● ● ●	The burner does not start and lock-out warning appears	34 - Erroneous electrical connections	Check connections
	The burner goes to lock-out	35 - Control box defective 36 - Presence of electromagnetic disturbance	Replace Use the radio disturbance protection kit
No blink	The burner does not start	37 - No electrical power supply 38 - A limiter or safety control device is open 39 - Control box fuses blown 40 - Control box lock-out 41 - No gas supply 42 - Mains gas pressure insufficient 43 - Minimum gas pressure switch fails to close	Close all switches - Check connections Adjust or replace Replace Reset control box Open the manual valves between meter and train Contact your GAS COMPANY Adjust or replace
	The burner repeats the starting cycle without lock out	44 - Mains gas pressure is near the value to which the min. gas pressure switch gas is adjusted. The repeated drop in pressure which follows valve opening causes temporary opening of the pressure switch itself, the valve immediately closes and the burner comes to a halt. Pressure increases again, the pressure switch closes again and the firing cycle is repeated. The sequence repeats endlessly.	Reduce operating pressure of minimum gas pressure switch. Replace gas filter
	Ignition with pulsation	45 - Poorly adjusted head 46 - Ignition electrode wrongly adjusted 47 - Poorly adjusted fan air gate: too much air 48 - Output during ignition phase is too high	Adjust, see p. 7 Adjust, see fig. (C)p. 6 Adjust Reduce
	The burner does not pass to 2nd stage	49 - Remote control device TR does not close 50 - Defective control box 51 - Servomotor faulty	Adjust oe replace Replace Replace
	Burner stops with air gate valve open	52 - Sevomotor faulty	Replace

STATUS (optional)

Assembly

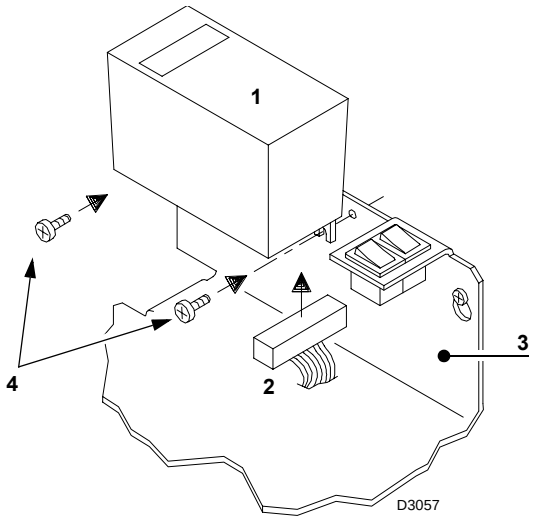

1 Status
2 Connector
3 Bracket of the burner
4 Fixing screws

A

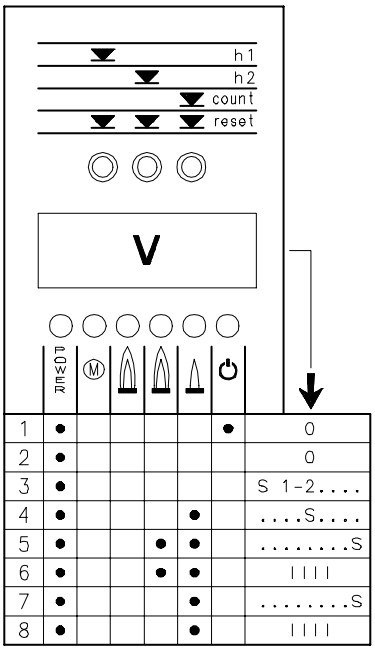

1	●					●	0
2	●						0
3	●						S 1-2....
4	●				●		....S....
5	●			●	●		.....S
6	●			●	●		IIII
7	●				●		.....S
8	●				●		IIII

B

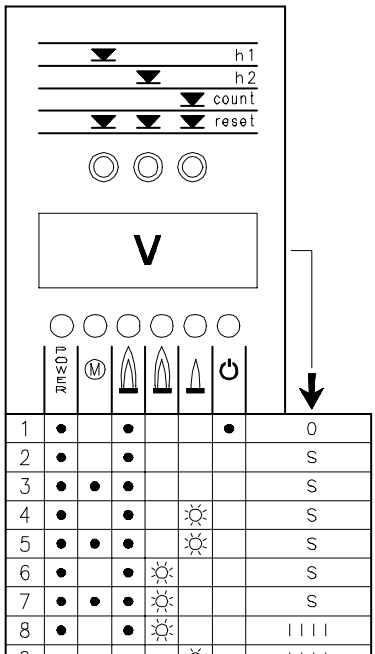

1	●		●			●	0
2	●		●				S
3	●	●	●				S
4	●		●		☼		S
5	●	●	●		☼		S
6	●		●	☼			S
7	●	●	●	☼			S
8	●		●	☼			IIII
9	●		●		☼		IIII
10	●	●	●		☼		IIII
11	●	●	●	☼			IIII

☼ = Led flashing
● = Led illuminated
S = Time in seconds
IIII = Burner start cycle terminated

D962

STATUS
Accessory available on request.
See page 2.

ASSEMBLY
The burners are preset to accept the Status. To assemble, proceed as follows:
- Connect Status 1) using connector 2) fitted on the bracket 3).
- Fasten Status to the bracket using the screws 4) supplied with the kit.

The **STATUS** unit has three functions:

1 - BURNER OPERATING HOURS AND THE NUMBER OF FIRINGS ARE SHOWN ON DISPLAY V

Total operating hours
Press button "h1".
2nd stage operating hours
Press button "h2".
1st stage operating hours (calculated)
Total hours - 2nd stage operating hours
Number of firings
Press button "count".
Resetting operating hours and number of firings
Press the three "reset" buttons simultaneously.
Non-volatile memory
The operating hours and the number of firings will remain in memory even in the case of electrical power failures.

2 - INDICATES THE TIMES RELATIVE TO THE FIRING STAGE
The leds illuminate in the following sequence, fig. A:

WITH REMOTE CONTROL THERMOSTAT TR CLOSED:
1 - Burner off, TL open
2 - Control device TL closed
3 - Motor start:
seconds count starts on read-out V
4 - Burner firing
5 - Transition to 2nd stage
seconds count stops on read-out V
6 - 10 seconds after stage 5 the code IIII will appear on the read-out: this indicates that the starting phase is terminated.

WITH REMOTE CONTROL THERMOSTAT TR OPEN:
1 - Burner off, TL open
2 - Control device TL closed
3 - Motor start:
seconds count starts on read-out V
4 - Burner firing
7 - 30 seconds after stage 4:
seconds count stops on read-out V
8 - 10 seconds after stage 7 the code IIII will appear on the read-out: this indicates that the starting phase is terminated.

The times, in seconds, shown on read-out V, indicate the succession of the various starting stages described on page 16.

3 - IN THE CASE OF BURNER MALFUNCTIONS, THE STATUS PANEL INDICATES THE EXACT TIME AT WHICH THE FAULT OCCURRED.
There are 11 possible combinations of illuminated leds, see fig. (B).
For the causes of the malfunction refer to the numbers shown between brackets; see the legend on page 19 for interpretation of the numbers.
1 .....(23)
2 .....(15 ÷ 22)
3 .....(21)
4 .....(1 ÷ 13, 31 ÷ 33, 35)
5 .....(21)
6 .....(31)
7 .....(21)
8 .....(31 ÷ 33)
9 .....(31 ÷ 33)
10 .....(21)
11 .....(21)

Key to symbols:

○ POWER = Power on
○ Ⓜ = Fan motor blocked (red)
○ = Burner lock-out (red)
○ = 2nd stage operation
○ = 1st stage operation
○ = Load level reached (Stand-by), led: on

D978

ACCESSORIES (optional):

- **RADIO DISTURBANCEPROTECTION KIT**

If the burner is installed in places particularly subject to radio disturbance (emission of signals exceeding 10 V/m) owing to the presence of an INVERTER, or in applications where the length of the thermostat connections exceeds 20 metres, a protection kit is available as an interface between the control box and the burner.

BURNER	**RS 70 - RS 100 - RS 130**
Code	3010386

- **KIT LONG HEAD**

BURNER	**RS 70**	**RS 100**	**RS 130**
Code	3010117	3010118	3010119

- **KIT FOR LPG OPERATION:** The kit allows the RS 70-100-130 burners to operate on LPG.

BURNER	**RS 70**		**RS 100**		**RS 130**	
Output kW	242 ÷ 814		349 ÷ 1163		466 ÷ 1512	
Blast tube length mm	250	385	250	385	280	415
Code	3010097	3010098	3010099	3010100	3010101	3010102

- **VIBRATION REDUCTION KIT**

BURNER	**RS 70**		**RS 100**		**RS 130**	
Output kW	192 ÷ 814		232 ÷ 1163		185 ÷ 1461	
Blast tube length mm	250	385	250	385	280	415
Code	3010201		3010202		3010373	3010374

- **GROUND FAULT INTERRUPTER:** code **3010329**
- **STATUS** (see page 20): code **3010322**
- **GAS TRAIN ACCORDING TO REGULATION EN 676 (with valves, pressure governor and filter)**: see page 8.

Important: The installer is responsible for the addition of any safety device not forseen in the present manual.

CN 目录

注意
文中所涉及数字标识定义如下：
1)(A) =图 A 第 1 部分，内容见本页；
1)(A)p.3 =图 A 第 1 部分，内容见第 3 页。

技术数据

型号			RS 70		RS 100		RS 130	
类型			821 T1		822 T1		823 T1	
出力 (1)	2 段火	kW Mcal/h	465 - 814 400 - 700		698 - 1163 600 - 1000		930 - 1512 800 - 1300	
	1 段火最小	kW Mcal/h	192 165		232 200		372 320	
燃料			天然气：G20 - G21 - G22 - G23 - G25					
			G20	G25	G20	G25	G20	G25
- 净热值		kWh/Nm^3 Mcal/Nm^3	10 8,6	8,6 7,4	10 8,6	8,6 7,4	10 8,6	8,6 7,4
- 绝对密度		kg/Nm^3	0,71	0,78	0,71	0,78	0,71	0,78
- 最大燃气量		Nm^3/h	81	94	116	135	151	175
- 最大燃气量时的压力 (2)		mbar	10,3	15,2	9,3	13,7	8,6	12,7
运行			• 间歇式 (每 24 小时至少停机一次) • 两段火 (大火 - 小火) 和单段火 (启动 - 停机)					
标准应用			热水锅炉、蒸汽锅炉、导热油炉					
环境温度		°C	0 - 40					
助燃空气温度		°C 最高	60					
电源		V Hz	230 - 400 带零线 ~ +/-10% 50 - 三相					
马达		rpm W V A	2800 1100 220/240 - 380/415 4,8 - 2,8		2800 1500 220/240 - 380/415 5,9 - 3,4		2800 2200 220/240 - 380/415 8,8 - 5,1	
点火变压器		V1 - V2 I1 - I2	230 V - 1 x 8 kV 1 A - 20 mA					
消耗电功率		W 最大	1400		1800		2600	
电气保护电极			IP 44					
符合 EEC 标准			2004/108 - 2006/95 - 2006/42					
噪音水平 (3)		dBA	75		77		78,5	

(1) 参考条件：环境温度 20°C - 大气压力 1000 mbar - 海拔 100 m a.s.l.
(2) 测试点 16)(A)p.3 处的压力，此时燃烧器处于最大出力，且炉膛压力为零，燃气环 2)(B)p.7 打开。
(3) 噪声值于制造商实验室内的测试锅炉上测得，且燃烧器处于最大额定出力状态。 .

可选机型列表

型号	电源	燃烧筒长度 mm
RS 70	三相	250
RS 100	三相	250
RS 130	三相	280

燃气类型

国家	燃气类型
IT - AT - GR - DK - FI - SE	$II_{2H3B / P}$
ES - GB - IE - PT	II_{2H3P}
NL	$II_{2L3B / P}$
FR	II_{2Er3P}
DE	$II_{2ELL3B /P}$
BE	$I_{2E(R)B}$, I_{3P}
LU - PL	$II_{2E 3B/P}$

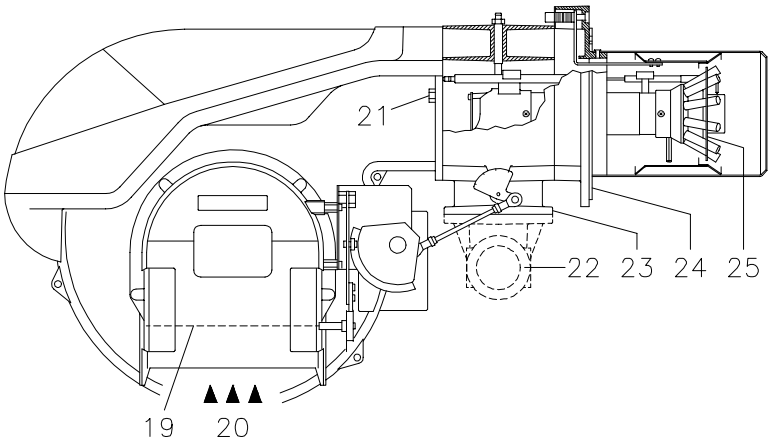

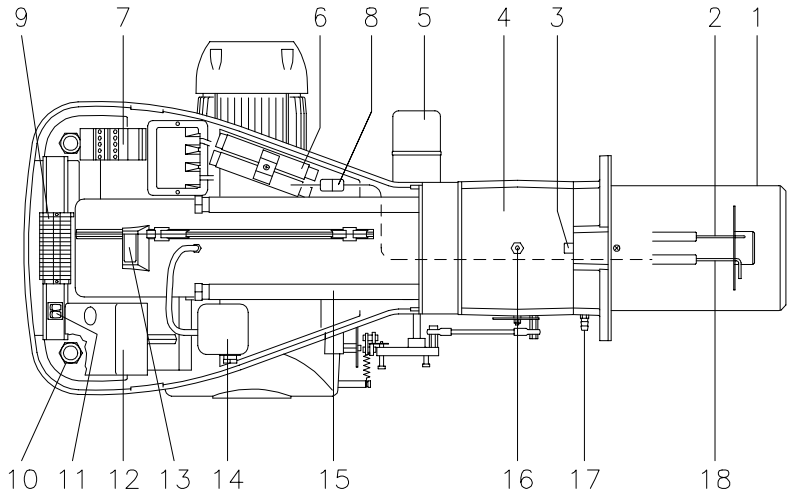

D3030 **(A)**

mm	A	B	C	kg
RS 70	1300	740	682	70
RS 100	1300	740	682	73
RS 130	1300	740	682	76

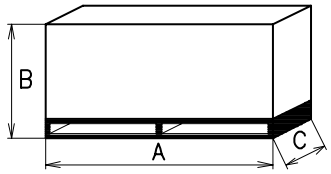

D36 **(B)**

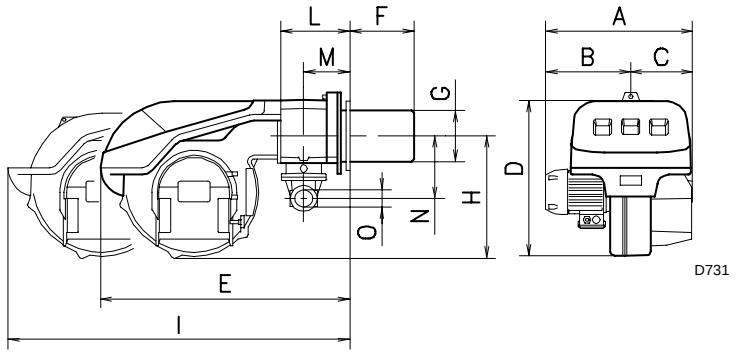

mm	A	B	C	D	E	F	G	H	I	L	M	N	O
RS 70	511	296	215	555	840	250	179	430	1161	214	134	221	2”
RS 100	527	312	215	555	840	250	179	430	1161	214	134	221	2”
RS 130	553	338	215	555	840	280	189	430	1161	214	134	221	2”

(C)

燃烧器描述 (A)

1 燃烧头
2 点火电极
3 燃烧头调节螺栓
4 多歧管
5 伺服马达控制燃气蝶阀以及风门挡板 (通过可变凸轮进行调节)
燃烧器停机时，风门挡板完全关闭以减少因通风，即风机进气口吸入空气，而造成的热量损失。
6 离子探针电缆上的插接组件
7 滑杆 15) 的加长杆
8 马达接触器和带有复位键的热继电器
9 接线端子
10 穿线孔
11 两个开关：
- 之一 燃烧器“ 停机 - 启动”开关
- 之二“ 1 段火 - 2 段火” 转换开关
12 带锁定指示灯和复位按钮的控制盒
13 观火孔
14 最小风压开关
(差压式)
15 打开燃烧器及检查燃烧头使用的滑杆
16 燃气压力测试点和燃烧头固定螺钉
17 风压测试点
18 火焰传感器
19 风门挡板
20 风机进风口
21 将风机固定到多歧管上的螺钉
22 燃气进气管路
23 燃气蝶阀
24 连接锅炉的法兰
25 稳焰盘

两类燃烧器故障：
- **控制盒锁定：** 如果控制盒按钮 12)(A) 指示灯 (红色 led 灯) 亮，指示燃烧器锁定。
如需复位，可按该按钮 1-3 秒。
- **马达跳闸：** 按下热继电器 7)(A) 上的复位按钮。

包装 - 重量 (B)

近似值
- 燃烧器放在木质托盘上，托盘可以使用叉车。
- 燃烧器外包装为纸箱，其最大尺寸见表 (B)。
- 燃烧器连同包装箱重量见表 (B)。

最大尺寸 (C)

近似值
燃烧器的外观尺寸见表 (C)。
注意：检查燃烧头时需要将燃烧器沿滑杆拉出。
燃烧器不带外壳，打开后的最大尺寸见值 **I**。

标准配置

1 - 燃气阀组法兰
1 - 法兰垫片
4 - 法兰安装螺丝 M 10 x 35
1 - 隔热垫
2 - 滑杆 15)(A) 的加长杆 6)(A)
(适用于 385-415 mm 燃烧筒的机型)
4 - 固定燃烧器法兰到锅炉上的螺丝：M 12 x 35
1 - 说明书
1 - 零配件表

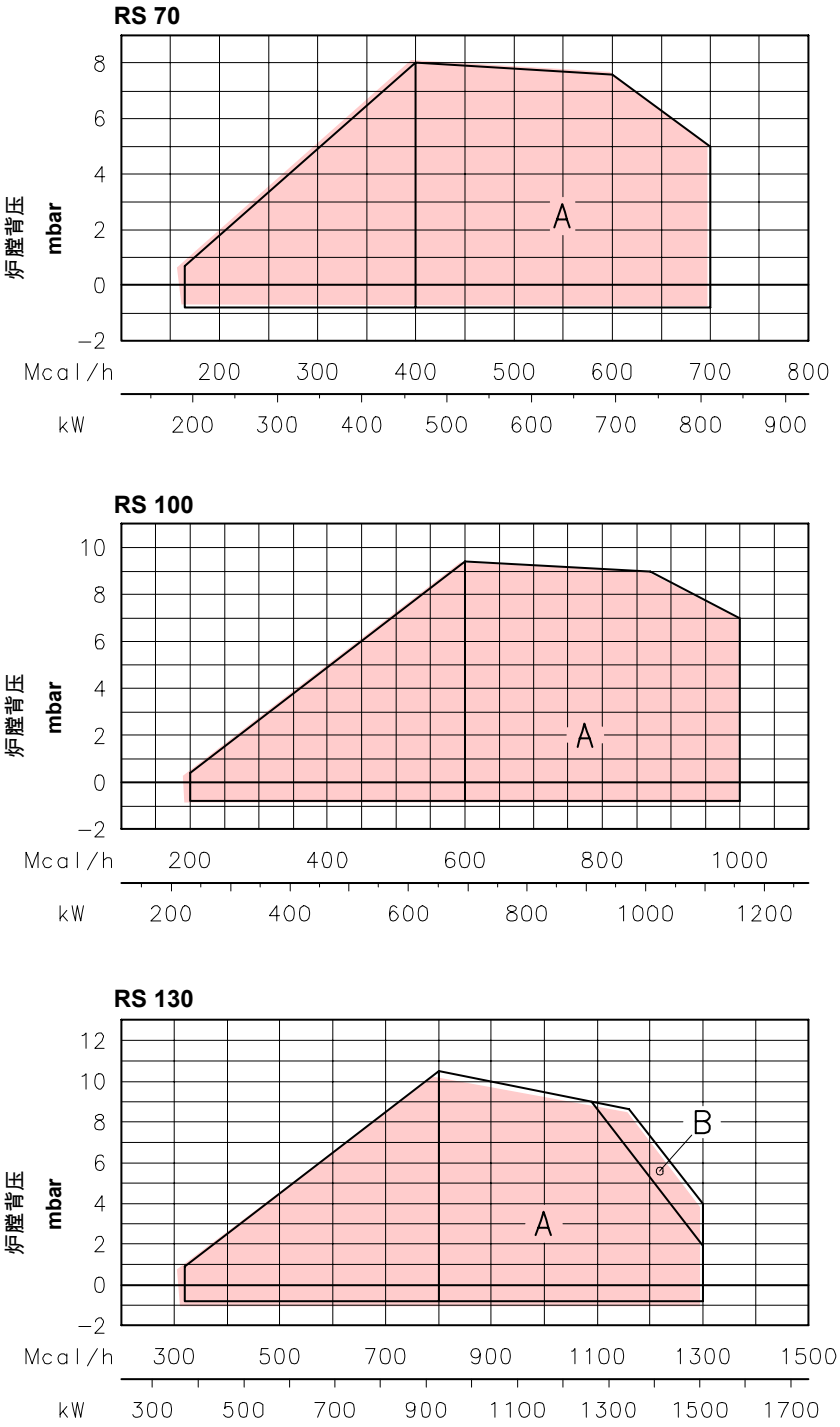

(A) D950

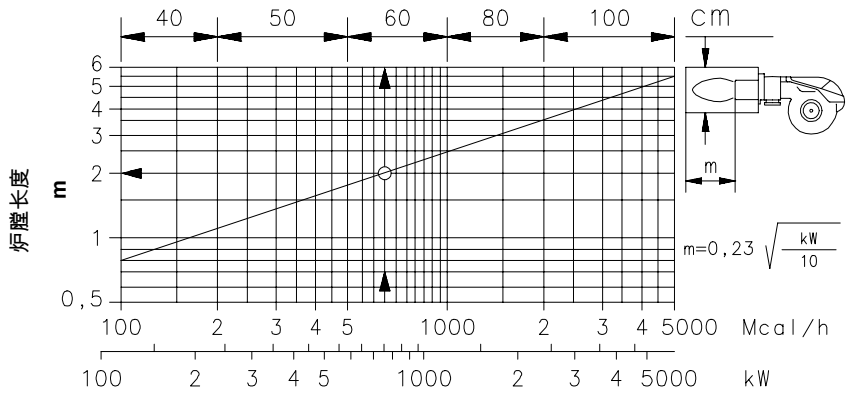

(B) D715

出力范围 (A)

RS 70-100-130 型燃烧器可以以两种模式运行：单段火模式及两段火模式

最大出力 必须在 A 区内选择。
要使燃烧器 (RS 130) 出力范围达到 B 区，需按照第 6 页所示校准燃烧头。

最小出力 不得低于图中所示的最小值：

RS 70 = 192 kW
RS 100 = 232 kW
RS 130 = 372 kW

注意：
出力曲线的出力值在如下条件下获得：环境温度 20 °C, 大气压 1000mbar (约 100 m 海拔)，燃烧头按第 7 页所示进行调整。

测试锅炉 (B)
出力曲线根据 EN 676 标准在专用测试锅炉上获得。图 (B) 为测试锅炉的炉膛直径及长度。
举例：
出力 756 kW：
直径 = 60 cm; 长度 = 2 m。

商用锅炉
如果锅炉符合 CE 认证，且锅炉炉膛尺寸与图 (B) 所列值近似，则燃烧器与锅炉的匹配不会出现问题。
如果燃烧器必须与未经CE认证的商用锅炉匹配，且该锅炉炉膛尺寸明显小于图 (B) 所列值，请咨询制造商。

RS 70 Δp (mbar)

kW	1	2	3					
			Ø 1” 1/2 3970145	Ø 1” 1/2 3970180	Ø 2” 3970146 3970160	Ø 2” 3970181 3970182	DN 65 3970147 3970161	DN80 3970148 3970162
465	4,2	0,2	11,6	8,5	4,8	5,2	-	-
515	4,8	0,2	13,9	10,0	5,8	6,2	-	-
565	5,6	0,3	16,3	12,0	6,8	7,2	-	-
615	6,4	0,3	18,9	13,5	8,0	8,2	-	-
665	7,3	0,3	21,7	15,0	9,2	9,5	-	-
715	8,3	0,4	24,6	17,2	10,5	10,8	-	-
765	9,3	0,4	27,7	18,5	11,3	11,5	4,4	-
814	10,3	0,4	30,9	20,0	13,2	13,0	5,0	-

RS 100 Δp (mbar)

kW	1	2	3					
			Ø 1” 1/2 3970145	Ø 1” 1/2 3970180	Ø 2” 3970146 3970160	Ø 2” 3970181 3970182	DN 65 3970147 3970161	DN80 3970148 3970162
695	3,7	0,4	23,5	17,0	9,9	10,1	-	-
760	4,2	0,4	27,4	18,5	11,7	11,5	4,4	-
825	5,0	0,5	31,6	20,5	13,6	13,2	5,1	-
890	5,8	0,5	36,1	23,0	15,6	14,0	5,8	-
955	6,5	0,6	40,9	26,0	17,7	16,0	6,6	-
1020	7,3	0,7	45,9	29,0	19,9	18,0	7,5	-
1085	8,3	0,8	51,1	33,0	22,3	20,0	8,4	4,5
1163	9,3	0,8	57,7	38,0	25,3	22,0	9,5	5,0

RS 130 Δp (mbar)

kW	1	2	3					
			Ø 1” 1/2 3970145	Ø 1” 1/2 3970180	Ø 2” 3970146 3970160	Ø 2” 3970181 3970182	DN 65 3970147 3970161	DN80 3970148 3970162
930	3,8	1,0	39,0	22,0	16,9	15,0	6,3	-
1010	4,5	1,1	44,9	28,0	19,6	17,0	7,4	-
1090	5,1	1,3	51,5	33,0	22,5	20,0	8,5	4,5
1170	5,8	1,5	58,3	37,0	25,6	22,0	9,6	5,1
1250	6,5	1,7	65,4	40,0	28,8	25,0	10,8	5,7
1330	7,2	1,8	72,9	43,0	32,2	28,0	12,2	6,4
1410	7,9	1,9	80,7	48,0	35,8	31,0	13,6	7,1
1512	8,6	2,0	91,2	53,0	40,6	34,0	15,3	8,0

(A)

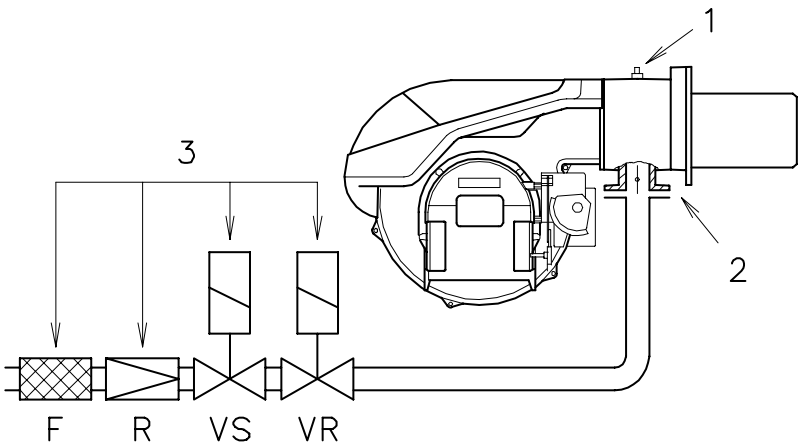

D963 **(B)**

燃气压力

左表列出燃烧器在 2 段火运行时，燃气供气管路的最小压力损失。

栏 1
燃烧头压力损失。
测试点 1)(B) 处的燃气压力，此时：
- 炉膛背压为 0 mbar。
- 燃烧器为 2 段火运行
- 燃气环 2)(B)p.7 按表 (C)p. 7 进行调整。

栏 2
燃气蝶阀 2)(B) 在最大开度 90° 时的压力损失。

栏 3
燃气阀组 3)(B) 的压力损失包括：调节阀 VR，安全阀 VS (两个全开)，调压器 R，过滤器 F。

各表中所列数值为：
天然气 G20 PCI 10 kWh/Nm^3 (8.6 Mcal/Nm^3)。
如果使用：
天然气 G25 PCI 8.6 kWh/Nm^3 (7.4 Mcal/Nm^3) 表中数值乘以一个系数 1.3。

计算燃烧器 2 段火运行时的大概出力，可按如下方法进行：
- 将测试点 1)(B) 处测得的燃气压力减去炉膛背压。
- 在表格栏 1 中找到相关燃烧器，然后查出与用公式计算得数最接近的燃气压力值。
- 读出左边相应的出力值。

举例 - RS 100:
- 2 段火运行
- 天然气 G20 PCI 10 kWh/Nm^3
- 燃气环 2)(B)p. 7 按表 (C)p.7 进行调整。
- 测试点 1)(B) 处燃气压力 = 8 mbar
- 炉膛背压 = 3 mbar

8 - 3 = 5 mbar

表中与 RS 100 型燃烧器 2 段火出力 825 kW 对应的压力为 5(栏 1) 。
此值只能作为参考值，精确的出力值应根据燃气计量表测量。

为了计算压力测试点 1)(B) 处的燃气压力，将燃烧器设定为 2 段火出力运行：
- 在表中找出相关燃烧器的近似出力值。
- 读出右边栏 1 中压力测试点 1)(B) 处的压力值。
- 将此压力值与与炉膛估计背压相加。

举例 - RS 100:
- 燃烧器 2 段火运行所需出力：825 kW
- 天然气 G20 PCI 10 kWh/Nm^3
- 燃气环 2)(B)p.7 p.7 按图 (C)p.7 调整。
- RS 100 型燃烧器出力为 825 kW 时的燃气压力，如表中栏 1 所示 1 = 5 mbar
- 炉膛压力 = 3 mbar

5 + 3 = 8 mbar

测试点 1)(B) 处所需压力。

4 + 2 = 6 mbar

压力测试点 1)(B) 处所需压力。

mm	A	B	C
RS 70	185	275 - 325	M 12
RS 100	185	275 - 325	M 12
RS 130	195	275 - 325	M 12

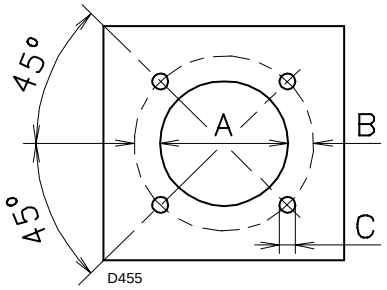

(A)

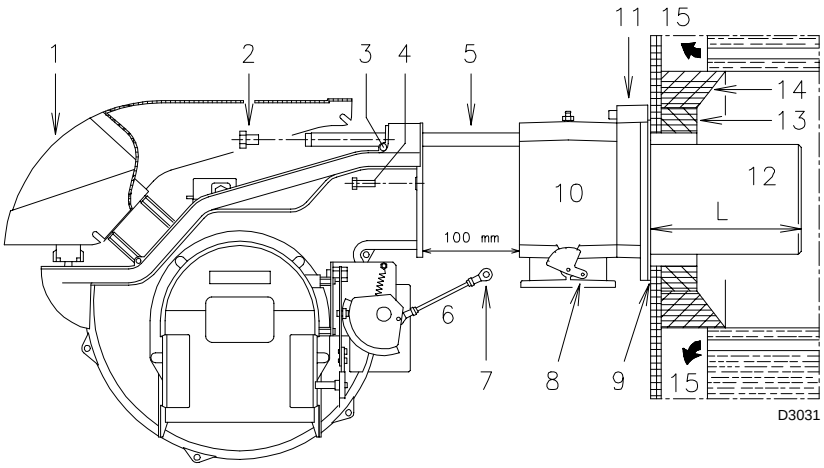

(B)

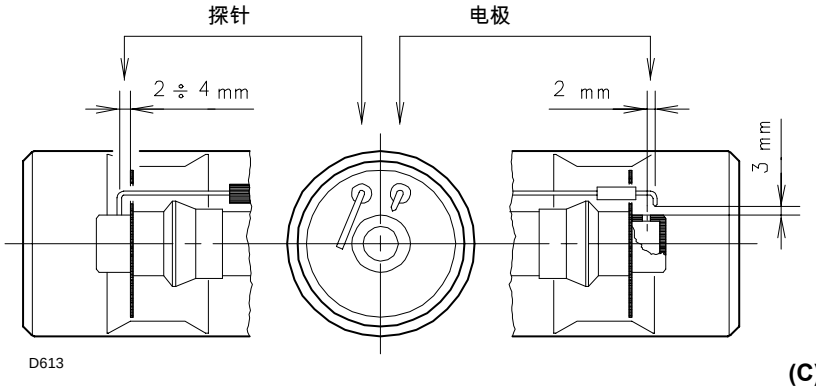

(C)

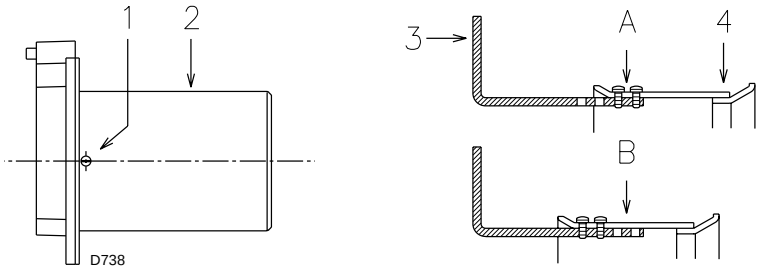

(D)

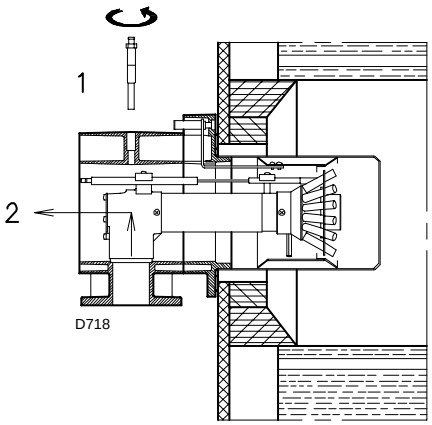

(E)

安装

锅炉前板 (A)

如 (A) 所示，在锅炉前板上钻孔。随燃烧器提供的隔热垫可帮助确定螺栓孔的位置。

燃烧筒长度 (B)

必须根据锅炉生产商提供的数据选择合适长度的燃烧筒，且在任何情况下其厚度必须大于锅炉钢板加炉补的厚度之和。

燃烧筒长度 12) :	**RS 70**	**RS 100**	**RS 130**
• mm	250	250	280

带前烟道 15) 或中心回焰炉膛的锅炉，其使用耐火材料制成的保护性炉补 13) 必须装于锅炉炉补 14) 和燃烧筒 12) 之间。
此保护性炉补不得妨碍取下燃烧筒。
带水冷却前板的锅炉，则不需要耐火材料制成的炉补 13)-14)(B)，除非锅炉制造商另有要求。

将燃烧器安装到锅炉上 (B)

在将燃烧器安装到锅炉之前，从燃烧筒开口处检查探针和电极连接是否正确，如图 (C) 所示。

从燃烧器上取下燃烧头，如图 (B)：
- 取下 4 个螺栓 3)，同时取下外壳 1)。
- 从刻度指示盘 8) 解开连杆 7) 的连接；
- 从滑杆 5) 上取下螺丝 2) ；
- 取下 2 个螺丝 4) ，将燃烧器沿滑杆 5) 拉出大约 100 mm ；
  断开探针及点火电极的电缆，从滑杆上取下开口销，将燃烧器从滑杆上完全取下。

燃烧头校准
RS 130 型燃烧器需在此处检查是否 2 段火运行时燃烧器的最大燃气输送量位于出力范围的 A 区或 B 区。见第 8 页。
如果位于 A 区，则不需要进行任何操作。
如果位于 B 区，则需要：
- 拧下螺丝 1)(D)，拆下燃烧筒 2)。
- 将固定杆3)(D)从位置A移至位置B, 以调节风筒 4) 回缩。
- 现在重新安装燃烧筒 2)(D) 和螺丝 1)。

一旦完成此操作 (如需要), 将燃烧器 11)(B) 安装到锅炉挂板上，并在之间安装隔热垫 9)(B)。使用随附的 4 个螺丝固定。

燃烧器和锅炉之间的密封必须达到气密标准。

如果进行上述检查时发现探针及电极的位置不正确， 可拆下螺丝 1)(E)，取出燃烧头内部部件 2)(E)，然后对探针和电极进行调整。

请勿旋转探针：应使其如 (C) 所示。如果探针位置距离点火电极太近，可能会损害控制盒的放大器。

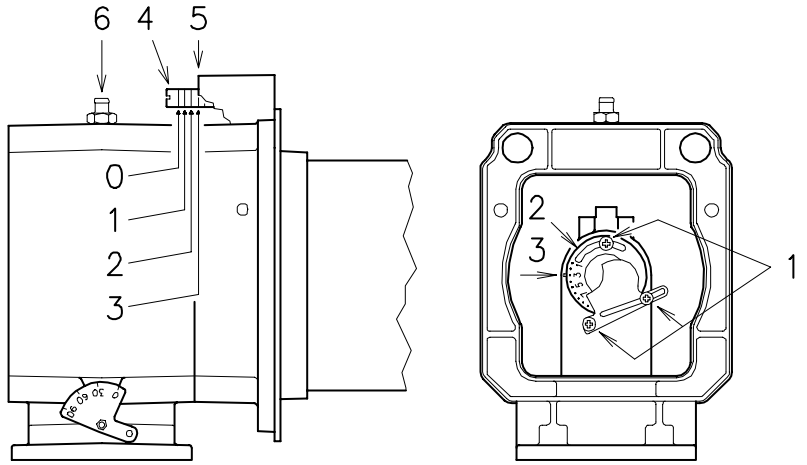

D719

(A) **(B)**

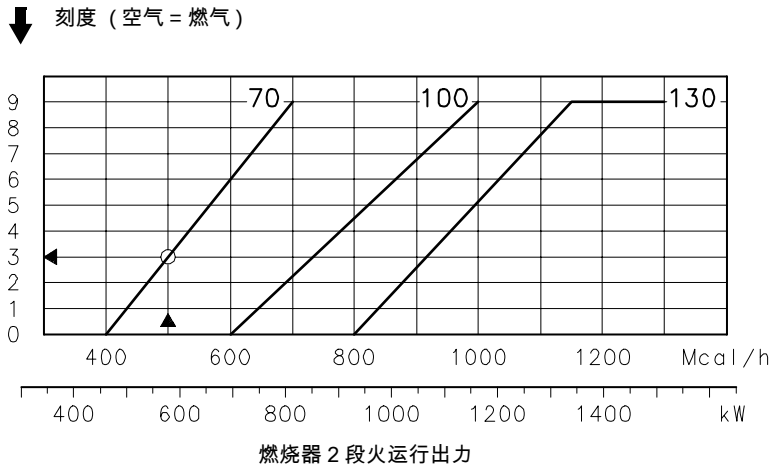

(C) D720

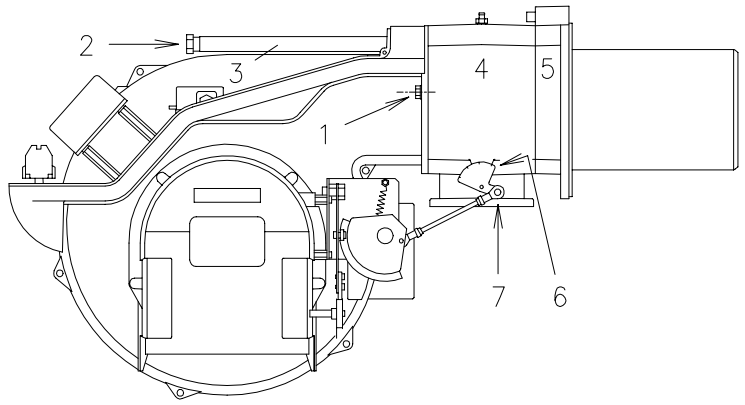

(D) D3032

燃烧头调节

安装到这一阶段后，如图 (A) 所示，已经将燃烧筒和多歧管安装到锅炉上。这时可以很容易的调节燃烧头。此设置只取决于燃烧器 2 段火运行时的出力。

在设置燃烧头之前应首先确定最大出力值。

燃烧头有两项可调节：

空气量调节和燃气量调节。

在图 (C) 所示表中查出调节空气量和燃气量的刻度值，然后按如下步骤进行操作：

空气量调节 (A)

旋转螺丝4)(A)直至刻槽上的刻度值与法兰前表面5)(A) 对齐。

燃气量调节 (B)

拧松 3 个螺栓 1)(B)，并转动环 2) 直至刻度值与指示标识 3) 一致。

将 3 个螺栓 1) 完全拧紧。

举例：

燃烧器出力 = 581 kW (500 Mcal/h)。

查看图表 (C) 得知，燃烧器此出力时，空气量和燃气量应调整至刻度 3，如图 (A) 和 (B) 所示。

注意

图 (C) 所示为理想的燃烧头设定状态。如果燃气主管路压力过低，不能达到第 5 页所示的 2 段火运行压力，且如果燃气环 2)(B) 未完全开启，可将其开启度扩大 1 或 2 个刻度。

继续上一个例子，如第 5 页所示，RS 70 型燃烧器出力为581 kW (500 Mcal/h)，测试点处的6)(A) 压力约为 6 mbar。如果不能达到此压力，则开启燃气环 2)(B) 至刻度 4 或 5。

确认燃烧性能良好稳定。

燃烧头调整完成后，将燃烧器重新装回到滑杆3)(D) 上，距多歧管 4)(D) 约 100mm，此时燃烧器位置如图 (B)p.6，插好离子探针与点火电极的电缆，然后将燃烧器推近多歧管，直至图 (D) 所示位置。

将螺丝 2) 重新装回滑杆 3) 上。

用螺丝 1) 将燃烧器与多歧管固定好。

将铰链 7) 重新与分度尺 6) 连接。

注意

将燃烧器重新安回两个滑杆上后，建议轻轻的拉出高压电缆以及离子探针电缆，直至它们被轻轻的拉紧。

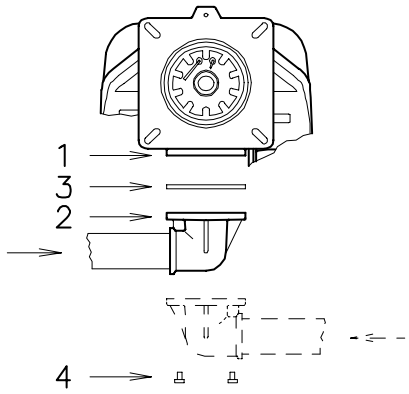

(A) D722

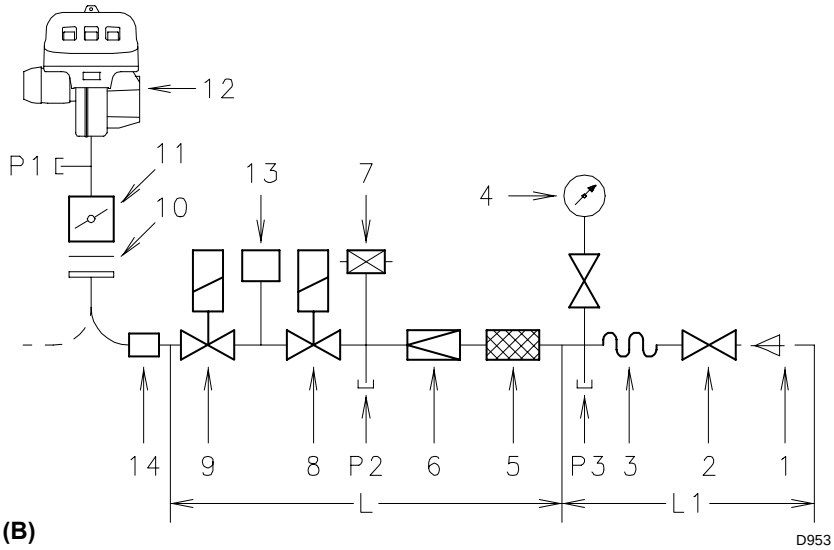

(B) D953

符合 EN 676 标准的燃气燃烧器及其相关燃气阀组

燃气阀组 L			燃烧器			13	14
Ø	C.T.	代码	RS 70	RS 100	RS 130	代码	代码
1”1/2	-	3970145	•	•	•	3010123	3000843
1”1/2	-	3970180	•	•	•	3010123	3000843
2”	-	3970146	•	•	•	3010123	-
2”	♦	3970160	•	•	•	-	-
2”	-	3970181	•	•	•	3010123	-
2”	♦	3970182	•	•	•	-	-
DN 65	-	3970147	•	•	•	3010123	3000825
DN 65	♦	3970161	•	•	•	-	3000825
DN 80	–	3970148	-	-	•	3010123	3000826
DN 80	♦	3970162	-	-	•	-	3000826

(C)

燃气阀组组件

代码	组件		
	过滤器 5	调压器 6	电磁阀 8 - 9
3970145	GF 515/1	FRS 515	DMV-DLE 512/11
3970180	一体式 MB DLE 415		
3970146 3970160	GF 520/1	FRS 520	DMV-DLE 520/11
3970181 3970182	一体式 MB DLE 420		
3970147 3970161	GF 40065/3	FRS 5065	DMV-DLE 5065/11
3970148 3970162	GF 40080/3	FRS 5080	DMV-DLE 5080/11

燃气管路

- 用随燃烧器所附之法兰2)，垫片3)，及螺丝4)将燃气阀组与燃气管路附件 1)(A) 连接。
- 燃气阀组可从燃烧器的左边或右边进行安装，视具体情况，以方便安装为宜，见图 (A)。
- 燃气电磁阀 8)-9)(B) 必须尽可能靠近燃烧器以确保燃气在 3 秒的安全时间内达到燃烧头。
- 确认压力调节器的校准范围(弹簧颜色) 与燃烧器所需压力匹配。

燃气阀组 (B)

燃气阀组符合 EN 676 标准，不包含在燃烧器内，为单独订购组件，编码见表 (C)。

图示 (B)

1 - 燃气进气管路
2 - 手动阀
3 - 减震器
4 - 带旋钮的压力表
5 - 过滤器
6 - 压力调节器 (垂直)
7 - 最小燃气压力开关
8 - 安全电磁阀 VS (垂直)
9 - 调节电磁阀 VR (垂直)
两种调节方式：
• 点火出力 (快速开启)
• 最大出力 (慢速开启)
10 - 燃烧器标准法兰垫
11 - 燃气调节蝶阀
12 - 燃烧器
13 - 燃气阀 8)-9) 泄漏检测装置。
按 EN 676 标准要求，最大出力大于 1200kW 的燃烧器必须强制安装泄漏检测装置；适用于 RS 130 型燃烧器。
14 - 燃气阀组 / 燃烧器适配器

P1 - 燃烧头处压力
P2 - 燃气调节器后压力
P3 - 过滤器前压力

L - 需单独订购的燃气阀组编码见表 (C)
L1 - 由安装人员负责

表 (C) 示例

C.T. = 燃气阀 8) - 9) 泄漏检测装置：
- = 不带泄漏检测装置的燃气阀组；泄漏检测装置可单独订购，再进行安装 (参见栏 13)。
♦= 带 VPS 泄漏检测装置的燃气阀组。

13 = VPS 泄漏检测装置。如需要，可单独为燃气阀组订购此装置。
14 = 燃气阀组 / 燃烧器适配器。
如需要，可单独为燃气阀组订购此装置。

注意

调节燃气阀组请参看随附手册。

工厂设定电气接线
RS 70 - RS 100 - RS 130

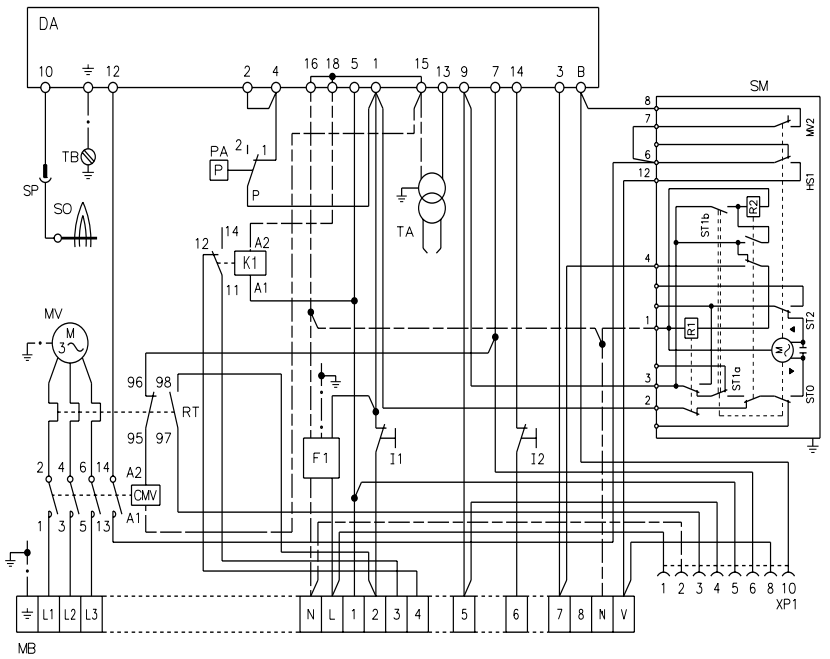

(A) D3055

电气系统

电气系统由制造商设定。

图示 (A)
RS 70 - RS 100 - RS 130 型燃烧器

- RS 70 - RS 100 - RS 130 型燃烧器，工厂预设为 **400 V** 电源。
- 如果使用 **230 V** 电源，将电机连接由星形改为角形，同时改变热继电器的设置。

图示 (A)

CMV	- 马达接触器
DA	- 控制盒 (Landis RMG)
F1	- 电磁干扰过滤器
K1	- 继电器
I1	- 开关：燃烧器 停机 - 启动
I2	- 开关：1 段火 - 2 段火转换开关
MB	- 燃烧器接线端子板
MV	- 风机马达
PA	- 风压开关
RT	- 热继电器
SM	- 伺服马达
SO	- 离子探针
SP	- 插头 - 插座
TA	- 点火变压器
TB	- 燃烧器接地
XP1	- 状态面板连接器

注意
在供电电源中，若是相相供电（不带零线），控制盒上的接地端子应与端子 6 短接。

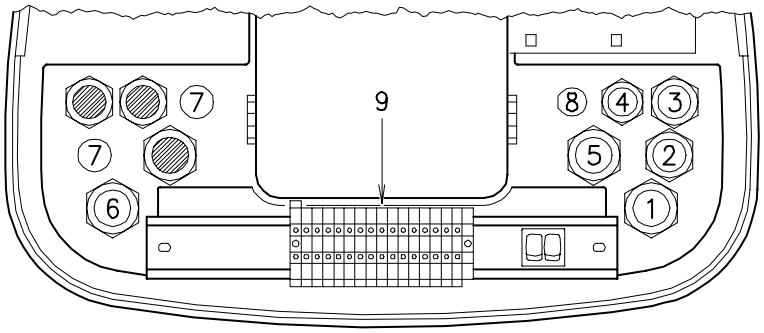

(A) D955

RS 70 - RS 100 - RS 130 型不带泄漏检测装置

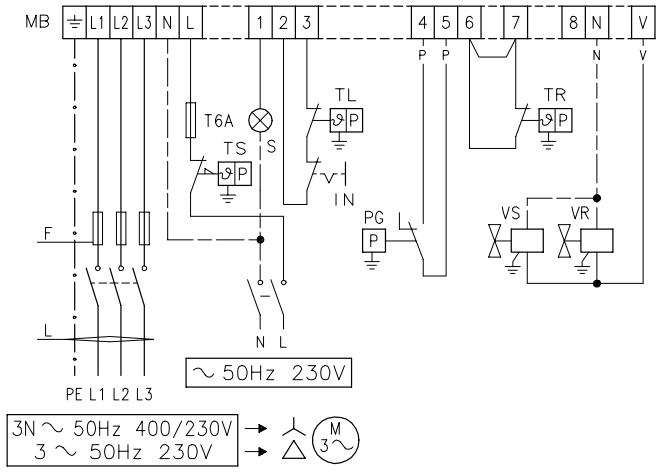

(B) D956

RS 70 - RS 100 - RS 130 带泄漏检测装置 VPS

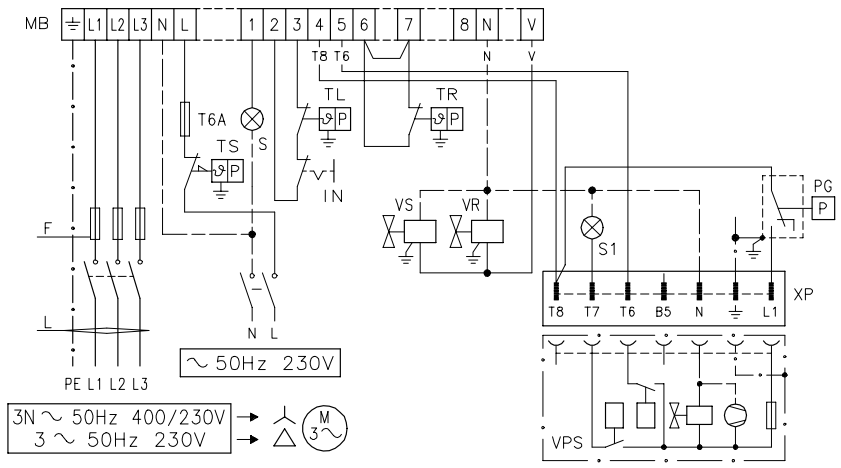

(C) D957

		RS 70		RS 100		RS 130	
		230 V	400 V	230 V	400 V	230 V	400 V
F	A	T10	T6	T16	T10	T16	T10
L	mm^2	1,5	1,5	1,5	1,5	1,5	1,5

(D)

电气连接

使用符合 EN 60 335-1 标准的柔性电缆：

- 如是 PVC 外皮，电缆最低标准为 H05 VV-F
- 如是橡胶外皮，电缆最低标准为 H05 RR-F

所有连接到燃烧器插座9)(A)的电缆必须穿过穿线管。

可以多种方式使用穿线管，下表列出了一种解决方案：

1 - Pg 13,5 三相电源
2 - Pg 11 单相电源
3 - Pg 11 远程控制装置 TL
4 - Pg 9 远程控制装置 TR
5 - Pg 13,5 燃气阀组
6 - Pg 13,5 燃气压力开关或燃气泄漏检测装置
7 - Pg 11 预留孔
8 - Pg 9 预留孔

图示 (B)

RS 70 - 100 - 130 型燃烧器，不带燃气泄漏检测装置。

图示 (C)

RS 70 - 100 - 130 型燃烧器，带 VPS 泄漏检测装置。

燃烧器每次启动前都会进行燃气泄漏检测。

保险丝及电缆横截面图示 (B) 和 (C), 见表 (D)。

未列出横截面积的则为：1,5 mm^2。

图示 (B - C)

IN - 燃烧器手动启停开关
XP - 泄漏检测装置插头
MB - 燃烧器接线端子板
PG - 最小燃气压力开关
S - 远程锁定信号
S1 - 泄漏检测装置的远程锁定信号
TR - 高-低火负荷远程控制系统：控制1段火及2段火运行。
如果燃烧器被设定为单段火运行，用跳接线替换远程控制装置 TR。
TL - 负荷限位远程控制系统：
当锅炉温度或压力达到预设值，燃烧器停机。
TS - 安全符合系统：
TL 发生故障时运行
VR - 调节阀
VS - 安全阀

热继电器校准

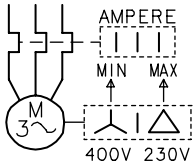

(A) D867

图示 (A)
热继电器校准 7)(A)p. 3
这是为避免由于掉相引起输入电流急剧增大而烧毁电机。

- 如果电机为星形连接，电压 **400 V**，指针位于“ MIN”。
- 如果电机为角形连接，电压 **230 V**，指针位于“ MAX”。

即使电机在电压 400 V 时的额定输入功率超出热继电器的量程，电气保护在任何情况下仍会发挥作用。

注意

- RS 70-100-130 型燃烧器出厂时预设为使用 400V 电源。如果使用 230 V 电源，将电机连接由星形改为角形，同时改变热继电器的设置。
- RS 70-100-130 型燃烧器为间歇运行模式。即燃烧器必须每24小时停机一次来检测控制盒在启动循环中的有效性。正常情况下，锅炉负荷控制系统会将燃烧器自动停机。如果燃烧器未能自动停机，需在 IN 中串联一个计时器，以使燃烧器可以至少每 24 小时停机一次。
- RS 70-100-130 型燃烧器出厂时预设为两段火运行模式，因此必须连接控制装置 TR。
  如果需要单段火运行，则不装控制装置 TR，而将端子 6 和 7 短接。

警告：不得将零线和相线反接。反接零线和相线会导致燃烧器因点火失败而锁定。

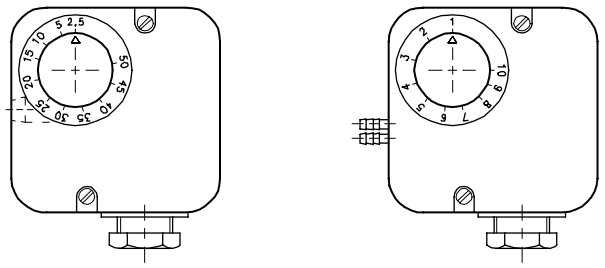

(A) **(B)** D897

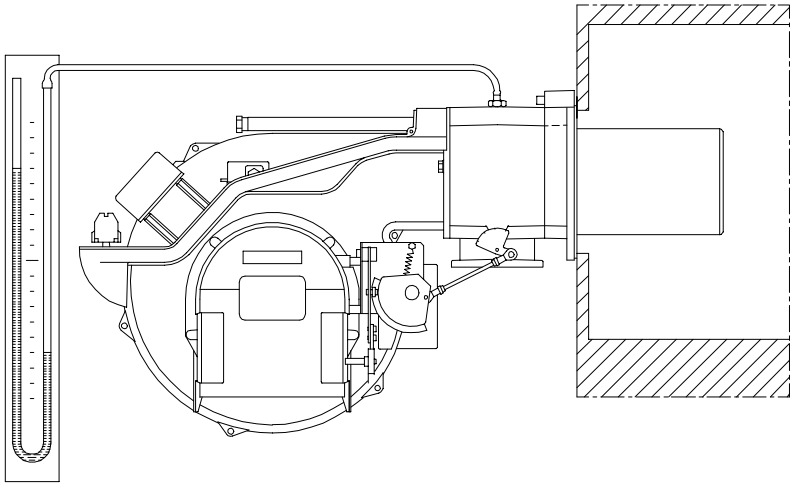

(C) D3033

伺服马达

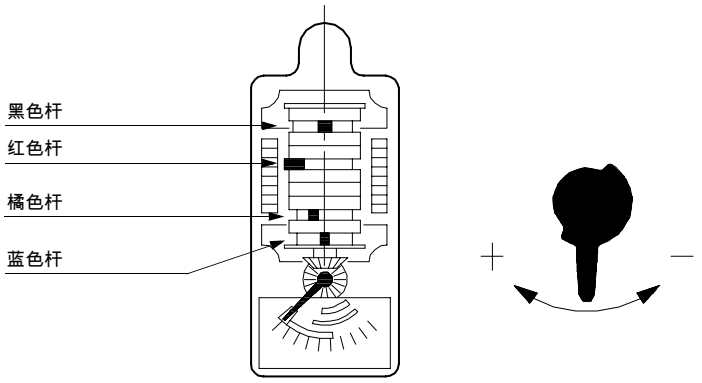

(D) D728

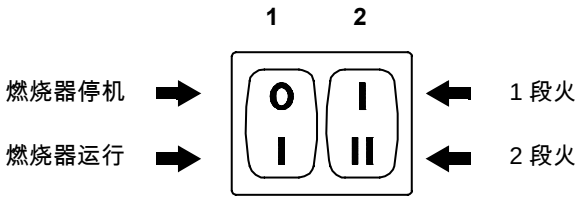

(E) D469

首次点火前调试

按第 7 页所述调整燃烧头、空气量及燃气量以及空气。

另外，还需对以下方面进行调节：

- 打开燃气阀组前的手动阀。
- 调整最小燃气压力开关到量程的开始位置 (A)。
- 调整风压力开关到量程的开始位置 (B)。
- 排尽燃气管路中的空气。

连续排放空气 (建议使用一根塑料管接到室外排放) 直至闻到燃气的味道。

- 在多歧管上的燃气压力测试点安装“ U”型压力计 (C)。

  根据第 5 页上的表，可用压力表上的读数来计算燃烧器 2 段火出力。
- 连接两个灯泡或测试仪到两个电磁阀 VR 和 VS 上，用以检查何时供电。

  如果两个电磁阀已安装了指示灯显示何时通过电流，则无需进行此步骤。

启动燃烧器前，最好先调整燃气阀组以便燃烧器能在最安全的情况下点火，如使燃气流量最小。

伺服马达 (D)

伺服马达通过改变凸轮轮廓可实现同步调节风门挡板和燃气蝶阀。

伺服马达旋转角度与控制燃气蝶阀开启程度的刻度盘所示角度相等。伺服马达12 秒内旋转90度。

请勿改变以下 4 个杆的出厂设定值；只需检查各杆的设置是否与以下所述相符：

红色杆 : 90°

最大旋转角度。燃烧器以 2 段火模式运行时，燃气蝶阀必须全开，角度为 90°。

蓝色杆 : 0°

最小旋转角度。燃烧器停机时，风门挡板及燃气蝶阀必须全关，角度为 0°。

橘色杆 : 15°

调整点火位置及 1 段火运行出力。

黑色杆 : 85°

接通 2 段火 LED 指示灯 (状态显示面板)。

刻度盘上的 4 色区域分别标识杆的运行位置。

燃烧器启动

闭合控制装置，并进行如下设置：

- 将开关 1)(E) 置于“ ON”的位置。
- 将开关 2)(E) 置于“ 1 段火运行”位置。

燃烧器一启动，通过观火孔 13)(A)p.3 检查风机叶片旋转方向是否正确。

确认连接到电磁阀上的灯泡或测试仪，或电磁阀自带的指示灯，显示电磁阀未通电。如果显示电磁阀通电，则应**立即**将燃烧器停机，并检查电气连接。

燃烧器点火

完成以上检查步骤后，可进行燃烧器点火。如果电机启动，但未产生火焰，且控制盒锁定，则复位并等待下一次点火。

如果点火仍未成功，有可能是燃气在 3 秒的安全时间内未到达燃烧头。

在此情况下，应增加点火燃气量。

燃气是否到的燃烧头可通过 U型压力表(C)查看。

一旦点火成功，即可进行全面的校准工作。

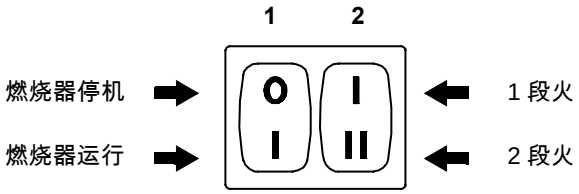

(A) D469

燃烧器校准
燃烧器的优化校准需要在锅炉排烟口安装烟气分析仪。

顺次调整：

1 - 首次点火出力
2 - 2 段火燃烧器出力
3 - 1 段火燃烧器出力
4 - 1 段火和 2 段火之间的中间出力
5 - 风压开关
6 - 最小燃气压力开关

1 - 点火出力
根据 EN 676 标准：

燃烧器最大出力不大于 120 kW 时
点火出力可以为燃烧器运行最大出力。举例：
- 最大运行出力 : 120 kW
- 最大点火出力 : 120 kW

燃烧器最大出力高于 120 kW 时
点火出力必须低于燃烧器运行最大出力若点火出力低于 120 kW，无需进行另外计算。若点火出力高于 120 kW，根据标准规定，点火出力应根据控制盒所标明的安全时间 "ts" 进行调整：
- 当 "ts" = 2s 时，点火出力必须小于等于燃烧器运行最大出力的 1/2 。
- 当 "ts" = 3s 时，点火出力必须小于等于燃烧器运行最大出力的 1/3。

举例 : 燃烧器最大运行出力为 600 kW。
点火出力必须小于等于：
• 300 kW 当 "ts" = 2s
• 200 kW 当 "ts" = 3s

如何测定点火出力：
- 将电离探针电缆上的插头 - 插座 8)(A)p.3 断开 (燃烧器点火，安全时间后进入锁定状态)。
- 连续进行点火 10 次。
- 在燃气表上读出消耗的燃气量。
  当 ts = 3s 时，此燃气量应小于或等于根据以下公式所计算出的数值：

$$\frac{\mathbf{Nm^3/h}\ (\text{燃烧器最大燃气量})}{\mathbf{360}}$$

举例 燃气 G 20(10 kWh/Nm^3)：
最大运行出力：600 kW，燃气量为 60Nm^3/h。
点火锁定10次后，燃气表上显示的供气量必须等于或小于：
60 : 360 = 0,166 Nm^3。

2 - 最大出力
燃烧器 2 段火出力必须按照第 4 页所示的出力范围进行设置。
按上述说明操作时，燃烧器处于 1 段火运行。现在将开关 2)(A) 置于 2 段火运行位置：伺服马达开大风门挡板，同时开启燃气蝶阀至 90°。

燃气校准
根据燃气表测定燃气量。
可根据第 5 页上的表格计算出合理的供气量，在“ U” 型压力计上读出燃气压力，见第 12 页图 (C) ，然后按第 5 页上说明进行计算。
- 如需减小供气量，则可降低燃气压；如果此时压力已经较低，则可关小调节阀 VR。
- 如需增大供气量，增大燃气压力。

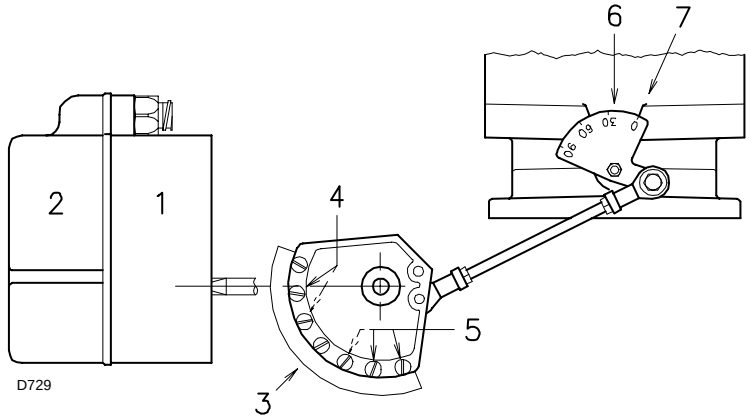

1 伺服马达
2 凸轮盖
3 可变轮廓凸轮
4 凸轮起始廓线调节螺丝
5 凸轮末端廓线调节螺丝
6 燃气蝶阀开启角度刻度盘
7 刻度盘 6 的刻度

(A)

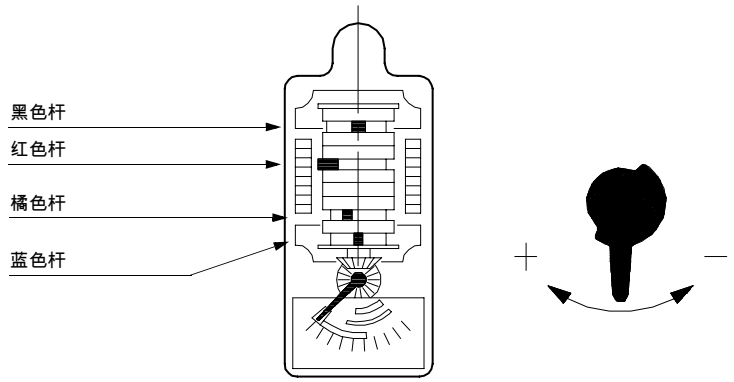

(B)

空气量调节
通过调节螺丝 5) 逐步调整凸轮 3)(A) 的外廓线。
- 顺时针调节螺丝增大空气量。
  逆时针调节螺丝减小空气量。

3 - 最小出力
燃烧器的 1 段火出力必须设定在第 4 页所示出力范围内。
将按钮 2)(A)p.13 置于 1 段火运行位置：伺服马达 1)(A) 关闭风门挡板及燃气蝶阀至 15° 角，此为工厂最初设定的调节位置。

调整燃气量
根据气量计测定燃气量。
- 如需减小供气量，可依次逐步减小橘色杆 (B) 的角度 15° 至 13° 至 11°.....
- 如需增加供气量，将开关 2)(A)p.13 置于 2 段火运行位置，并依次逐步增加橘色杆的角度，如 15° 至 17° 至 19°....
  此时，可回到 1 段火运行模式，并测量燃气量。

注意
当凸轮 St1 角度减小时，伺服马达随着凸轮的调节而调节。
如需增大凸轮角度，则先调至 2 段火运行位置，增大角度，然后再回调至 1 段火运行位置，以测试凸轮调节的有效性。

空气量调整
通过调节螺丝 4) 逐步调整凸轮 3)(A) 的起始廓线。
最好不要调节第一个螺丝，因为此螺丝用于将风门挡板完全关闭。

4 - 中间出力
燃气量调节
此时无需调整燃气供应量。

风量调节
使用开关 1)(A)p.13 将燃烧器停机，并调节凸轮中间的螺丝以保证凸轮转动平滑不卡涩。
不要改变凸轮末端的螺丝位置，此位置已经被调整至控制最小出力和最大出力运行时风门挡板的位置。

注意
一旦完成对“ 最大 - 最小 - 中间” 出力的调整，再次检查点火：此时的噪音水平应与燃烧器点火后运行时的噪音水平相当。
如果燃烧器出现任何震动，应减小点火时的燃气量。

风压开关 14)(A)p. 3

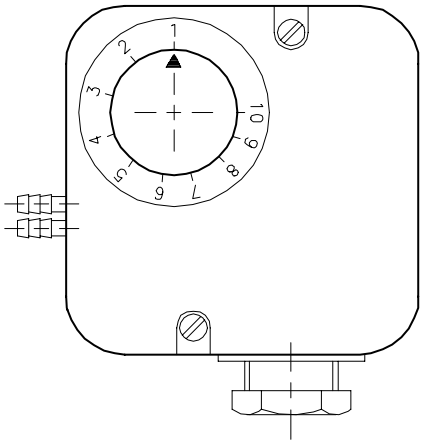

(A) D521

最小燃气压力开关 7)(B)p. 8

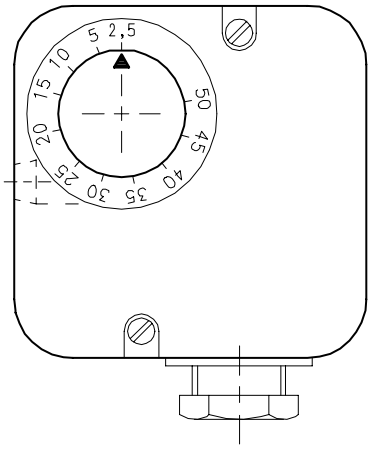

(B) D896

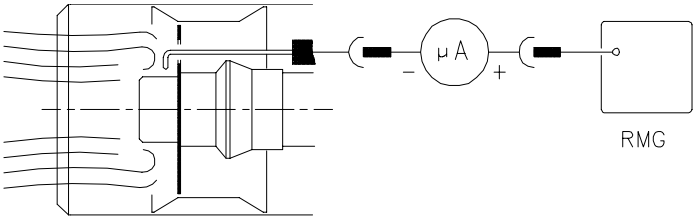

(C) D3023

5 - 风压开关 (A)

在进行上述燃烧器各部分调节时，空气压力开关置于量程 (A) 的开始位置。上述所有调整结束后，方可调节空气压力开关。
当燃烧器运行处于 1 段火运行时，顺时针转动压力调节旋钮，增大压力直至燃烧器锁定。
然后将调节旋钮逆时针回调约 20%，重新启动燃烧器以确认其运行正常。
如果燃烧器再次锁定，则沿逆时针方向继续微调压力调节旋钮。

注意

通常，空气压力开关必须保证烟气中 CO 浓度不超过 1% (10,000 ppm)。
要检测此项，需在锅炉烟囱内安装烟气分析仪，减小风机进风口大小（如可使用厚纸板部分遮挡），在烟气中 CO 浓度超过 1% 时，检查燃烧器是否会锁定停机。

空气压力开关如果连接两个管路的话，则以“差压”模式运行。如果在预吹扫阶段锅炉炉膛内出现负压，无法闭合空气压力开关，需在空气压力开关和风机进气口之间加装一个软管。这样，空气压力开关就能以差压模式运行。

警告

以“差压”模式工作时，空气压力开关只适用于工业领域，空气压力开关仅控制风机运行而不涉及 CO 排放的规定。

6 - 最小燃气压力开关 (B)

上述调整结束后，开始调节最小燃气压力开关，此前该开关位置应置于量程开始位置 (B)。
当燃烧器以 2 段火运行时，通过顺时针旋转压力调节旋钮增大压力直至燃烧器锁定。
之后，逆时针旋转旋钮调节 2 mbar，使燃烧器重新启动以确保燃烧器运行平稳。
若此时燃烧器再次锁定，继续沿逆时针方向旋转旋钮 1 mbar。

火焰检测 (C)

燃烧器带有一个电离系统，可以对火焰状态进行检查。控制盒允许运行的最小电流为 5 µA。
燃烧器提供更大的电流，因此一般不需要控制电流的强度。但是，如需测量电离电流，则先断开电离探针电缆上的插头 - 插座 8)(A)p.3，然后安装一个量程为 100 µA 的微安计。
安装时需仔细检查电极连接是否正确！

正常燃烧
(n° = 时间从 0 开始)

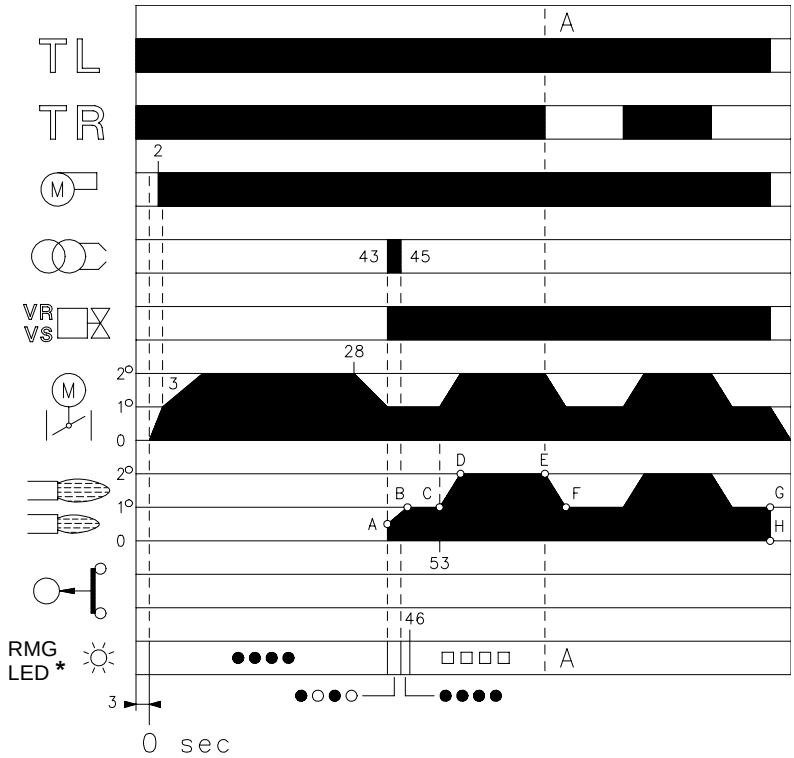

* ○ 关 ● 黄色 □ 绿色 ▲ 红色
详见第 18 页

(A) D3051

点火故障

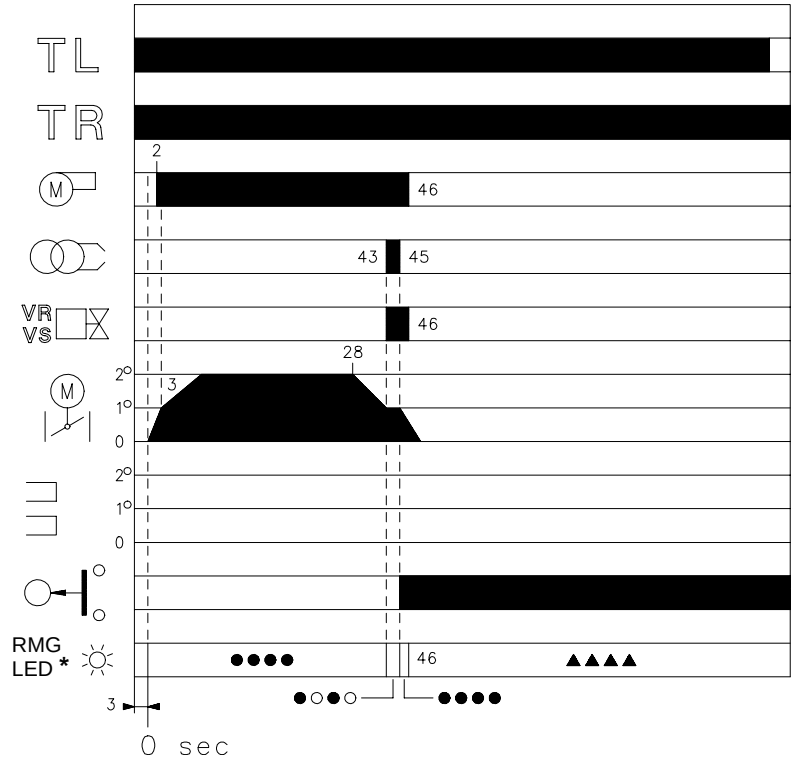

* ○ 关 ● 黄色 ▲ 红色
详见第 1 页。

(B) D3052

燃烧器运行

燃烧器启动 (A)

- : 远程控制装置 TL 闭合。
  伺服马达启动 : 伺服马达旋转，开启至带橘色杆凸轮上所设定之角度。
  时间大约 3 秒；
- 0 秒 : 控制盒启动程序开始。
- 2 秒 : 风机启动。
- 3 秒 : 伺服马达启动 : 伺服马达旋转，直至触发带红色杆凸轮上的接触器。
  此时，风门挡板调节至 2 段火出力位置。在 2 段火的通风量下预吹扫时。
  吹扫时间为 25 秒。
- 28 秒 : 伺服马达启动 : 伺服马达旋转，关小至带橘色杆凸轮上所设定之角度。
- 43 秒 : 此时风门挡板和燃气蝶阀处于1段火出力位置。
  点火电极产生火花。
  安全阀VS和调节阀VR快速开启。火焰在低出力水平 (A 点) 时点燃。之后，随着阀门缓慢开启至 1 段火出力位置 (B 点) 时，燃烧器的出力水平也随之逐渐平稳增加。
- 45 秒 : 火花熄灭。
- 53 秒 : 如果远程控制装置 TR 闭合，或已被桥接器替代，则伺服马达将继续旋转直至启动带红色杠杆凸轮，用以将风门挡板和燃气蝶阀调节至 2 段火运行位置，即 C-D 部分。

控制盒启动阶段结束。

稳态运行 (A)

安装有控制装置 TR 的系统。

启动周期结束后，伺服马达的控制权转由控制锅炉温度及压力的控制装置 TR 来控制， D 点。
(但控制盒会继续检测火焰状态以及空气压力开关位置是否正确)。

- 如果温度或压力升高至控制装置TR断开，伺服马达关小燃气蝶阀及风门挡板，燃烧器由 2 段火转为 1 段火运行， E-F 部分。
- 如果温度或压力降低至控制装置TR闭合，伺服马达开启燃气蝶阀及风门挡板，燃烧器由 1 段火转为 2 段火运行。此过程会循环往复。
- 1 段火运行时，G - H 部分，如热量需求小于燃烧器所提供的热量，在此情况下，控制装置 TL 断开，燃烧器停止运行。伺服马达回复到蓝色杆凸轮所设定的角度 0°。风门挡板完全关闭以将热量损失降至最低。

未安装 TR 的系统 (连短接线)

燃烧器会按以上所述被点燃。如果温度或压力升高至控制装置 TL 断开，则燃烧器停机 (如图 A-A 所示)。

点火失败 (B)

如果燃烧器点火失败，会在燃气电磁阀开启后 3 秒且在控制装置 TL 闭合 49 秒后内锁定。控制盒红色指示灯将会亮起。

燃烧器运行时火焰熄灭

如果燃烧器运行时，火焰突然熄灭，则燃烧器会在 1 秒内锁定。

观火孔

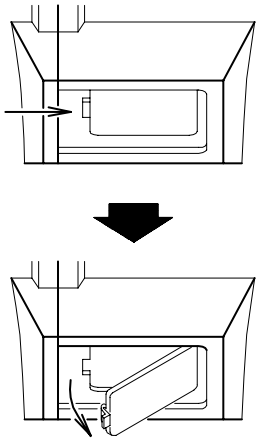

(A) D709

打开燃烧器

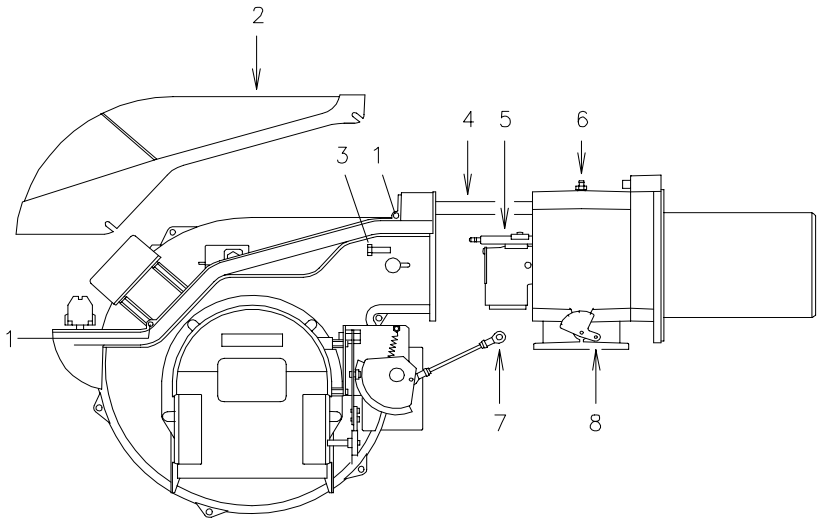

(B) D3034

最终检查 (燃烧器运行时)

滑 t 断开最小燃气压力开关的电缆线；

- 断开远程控制装置 TL ；
- 断开远程控制装置 TS ；

燃烧器停机

- 断开连接风压开关的公共端子 P 的接线；
- 断开电离探针的电缆线；

燃烧器锁定

- 确保各调节装置上的机械锁定系统已经锁紧。

维护

燃烧

燃烧器的最优校准需要安装烟气分析仪。如果任何参数与之前测量数值出入较大，则需在维护时特别注意这些参数的校准。

燃气泄漏检测

确认燃气表和燃烧器之间的连接管路没有燃气泄漏。

燃气过滤器

过滤器脏时请更换（ 详见燃气阀组安装指南部分)。

观火孔

清洁观火孔 (A)。

燃烧头

打开燃烧器，确认燃烧头所有部件状态良好，没有出现因高温变形或有污物附着其上等情况，且燃烧头位置正确。如有疑问，拆开弯头 5)(B) 查看。

燃烧器

检查以确认控制风门挡板及燃气蝶阀的连杆是否有磨损或螺丝松动的情况。同时确认固定燃烧器接线端子板电缆的各螺丝没有任何松动。

清洁燃烧器外部时需特别注意传动接头和凸轮 3)(A)p.14 的情况。

燃烧

如果在燃烧器运行的初始阶段获得的燃烧数据不符合当地强制标准，或者在任意出力下燃烧效果不好，则需调整燃烧器。用卡片记录新产生的燃烧数据，可作为之后对燃烧器进行维护调试的参考信息。

打开燃烧器 (B):

- 切断电源。
- 拆下螺栓 1), 同时 取下保护盖 2)。
- 从刻度指示盘 8) 处取下连杆 7)。
- 在滑杆 4) 上安装两个附带的加长杆 (适用于燃烧筒长度为 385-415 mm 的燃烧器)。
- 移除螺栓 3)，沿滑杆 4) 将燃烧器拉出约 100 mm。断开探针和电极电缆，然后将燃烧器完全拉出。

取下螺丝 6) 后，可接着取下燃气分配管组件 5)。

关闭燃烧器 (B):

- 将燃烧器推到距多歧管大约 100 mm 处。
- 重新连接上述各电缆，并且将燃烧器滑进去直到停止。
- 重新拧紧螺栓 3)，将探针和电极电缆轻轻拉紧。
- 重新将连杆 7) 与刻度盘 8) 相连。
- 从滑杆 4) 上取下两个加长杆。

燃烧器启动周期故障诊断
启动过程中的各项指示见下表：

颜色代码表	
启动顺序	**颜色代码**
预吹扫	●●●●●●●●●
点火阶段	●○●○●○●○●
运行，火焰正常	□□□□□□□□□
运行，火焰较弱	□○□○□○□○□
电压低于 ~ 170V	●▲●▲●▲●▲●
锁定	▲▲▲▲▲▲▲▲▲
虚假火焰	▲□▲□▲□▲□▲
图示： ○ 灯灭 ● 黄灯 □ 绿灯 ▲ 红灯	

复位控制盒及执行故障诊断
控制盒具有故障诊断功能，因此能很容易确定故障原因（指示器：**红色 LED 指示灯**）。
要使用这一功能，须等进入安全保护状态（锁定状态）至少 10 秒之后再按下复位按钮。
控制盒红色 LED 指示灯闪烁 (闪烁间隔 1 秒)，每组闪烁以 3 秒间隔不断重复出现。
可根据指示灯的闪烁次数来判断可能的故障原因，系统复位时必须按住按钮 1-3 秒。

红色 LED 指示灯亮 等待至少 10 秒	**锁定**	**按下复位按钮 时间大于 3 秒**	**闪烁**	**间隔 3 秒**	**闪烁**
			● ● ● ● ●		● ● ● ● ●

以下方法可用来复位控制盒及执行故障诊断。

复位控制盒
复位控制盒程序如下：
- 按住复位键 1-3 秒。
  松开复位键 2 秒后燃烧器重启。
  若温度限位开关处于断开状态，则燃烧器不能重启。

可视诊断
指示引起燃烧器锁定的故障类型。
查看故障诊断，并按以下步骤操作：
- 当红色 LED 持续亮起 (燃烧器锁定) 时，按住按钮超过 3 秒。
  黄灯闪烁说明操作成功。
  松开按钮。指示灯闪烁次数提示故障原因，如第 19 页列表所示。

软件诊断
通过与 PC 电脑连接，报告燃烧器使用寿命，提示运行时间、锁定次数及类型、控制盒序列号等 .....
查看故障诊断，并按以下步骤操作：
- 当红色 LED 持续亮起 (燃烧器锁定) 时，按住按钮超过 3 秒。
  黄灯闪烁说明操作成功。
  松开按钮 1 秒之后再次按下按钮超过 3 秒直至黄灯再次闪烁。
  松开按钮，红色 LED 高频闪烁：此时连接被接通。

一旦操作成功，必须按照上述控制盒复位程序将控制盒恢复初始状态。

按键时间	**控制盒状态**
1 - 3 秒	在可视诊断前复位控制盒。
大于 3 秒	在锁定状态进行可视诊断： (Led 指示灯以 1 秒间隔闪烁)。
开始可视诊断后超过 3 秒	通过红外线与 PC 电脑连接进行软件诊断 (可查看运行时间、故障等)

控制盒指示灯闪烁情况提示故障类型，如第 19 页列表所示。

闪烁次数	故障	可能的故障原因	排除故障建议
闪烁 2 次 ● ●	预吹扫及安全时间过后，燃烧器未产生火焰进入锁定状态	1 - 电磁阀 VR 通过燃气量过小 2 - 电磁阀 VR 或 VS 未开启 3 - 燃气压力过低 4 - 点火电极调节不当 5 - 由于绝缘损坏导致电极接地 6 - 高压电缆故障 7 - 由于高温使高压电缆变形 8 - 点火变压器故障 9 - 电磁阀或点火变压器接线错误 10 - 控制盒故障 11 - 燃气阀组前的阀门关闭 12 - 燃气管路中有空气 13 - VS 和 VR 燃气阀未接线或有电磁线圈损坏	增大 更换线圈或电路板 增大压力 调节，见图 (C)p. 6 更换 更换 更换或保护 更换 检查 更换 开启 排净空气 检查连接或更换线圈
闪烁 3 次 ● ● ●	燃烧器启动前出现锁定	14 - 风压开关处于运行位置	调节或更换
	燃烧器启动后因锁定停机	由于没有足够的空气压力导致空气压力开关失效： 15 - 风压开关开关调节不当 16 - 风压开关的压力测试点处的管路堵塞 17 - 燃烧头调节不当 18 - 锅炉炉膛负压过高	 调节或更换 清洁 调节 风压开关连接到风机进气口
	在预吹扫阶段锁定	19 - 马达远程控制接触器故障 20 - 马达故障 21 - 马达保护启动	更换 更换 三相连接时复位热断路器
闪烁 4 次 ● ● ● ●	燃烧器启动后锁定	22 - 虚假火焰	更换控制盒
	燃烧器停机时锁定	23 - 燃烧头处持续火焰或虚假火焰	消除持久性的火焰或更换控制盒
闪烁 7 次 ● ● ● ● ● ● ●	燃烧器出现火焰后立即锁定	24 - 电磁阀 VR ，通过燃气量过小 25 - 离子探针调节不当 26 - 电离不足 (小于 5 μ A) 27 - 探针接地 28 - 燃烧器接地不良 29 - 零线 - 火线 接反 30 - 控制盒故障	增大 调整，见图 (C)p. 6 检查探针位置 撤回或更换电缆 检查接地 更正 更换
	燃烧器在 1 段火和 2 段火之间转换时燃烧器锁定。	31 - 空气过多或燃气过少	调节空气及燃气
	运行时，燃烧器锁定停机	32 - 探头或电离电缆接地 33 - 风压开关故障	更换磨损零件 更换
闪烁 10 次 ● ● ● ● ● ● ● ● ● ●	燃烧器未启动并出现锁定	34 - 电气连接错误	检查连接
	燃烧器锁定	35 - 控制盒故障 36 - 存在电磁干扰	更换 使用抗电磁干扰保护组件
无闪烁	燃烧器不启动	37 - 电源没电 38 - 限制器或安全控制装置断开 39 - 控制盒保险丝熔断 40 - 控制盒锁定 41 - 没有燃气供应 42 - 主管路燃气压力不足 43 - 最小燃气压力开关断开	闭合所有开关 - 检查所有连接 调整或更换 更换 复位控制盒 打开阀组之前的手动阀 联系燃气公司 调整或更换
	燃烧器不断重复启动周期，未出现锁定	44 - 燃气管路中的燃气压力接近最小燃气压力开关的设定值。电磁阀开启后，压力突然下降会造成暂时性的压力开关断开，电磁阀立即关闭，导致燃烧器停机。压力增大后，压力开关再次闭合，点火周期重复。以此类推。	降低最小燃气压力开关的设定压力 更换燃气过滤器
	脉冲点火	45 - 燃烧头调节不当 46 - 点火电极调节不当 47 - 风门挡板调节不当：风量过大 48 - 点火阶段出力过大	调整，见第 7 页 调整，见图 (C)p. 6 调整 更换
	燃烧器不能进入 2 段火运行	49 - 远程控制装置 TR 断开 50 - 控制盒故障 51 - 伺服马达故障	调整或更换 更换 更换
	风门挡板开启时燃烧器停机	52 - 伺服马达故障	更换

状态面板 (可选组件)

装配

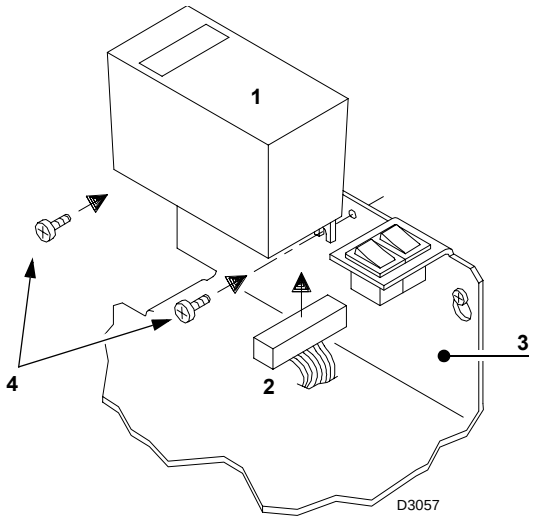

1 状态面板
2 连接器
3 固定支架
4 固定螺丝

A

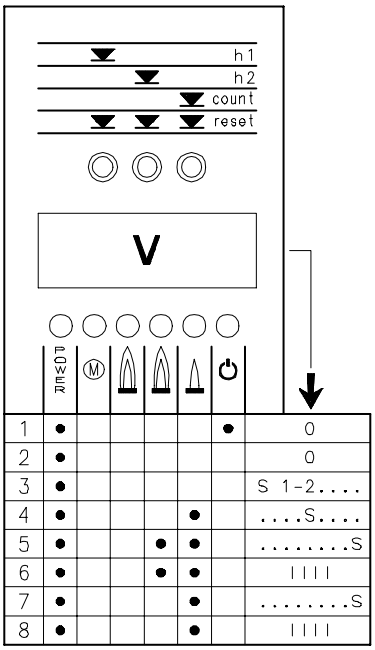

	POWER	M					
1	●					●	0
2	●						0
3	●						S 1-2....
4	●				●		....S....
5	●			●	●		.....S
6	●			●	●		IIII
7	●				●		.....S
8	●				●		IIII

B

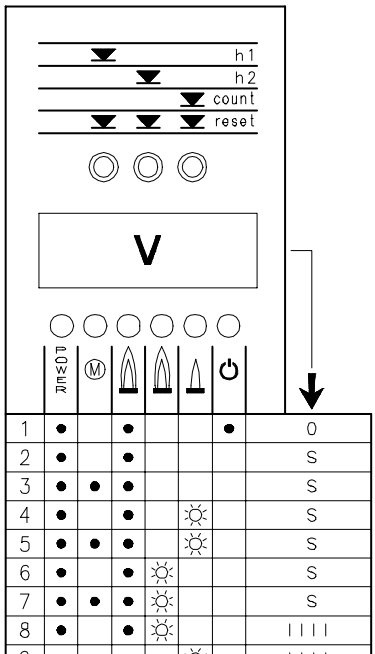

	POWER	M					
1	●		●			●	0
2	●		●				S
3	●	●	●				S
4	●		●		☼		S
5	●	●	●		☼		S
6	●		●	☼			S
7	●	●	●	☼			S
8	●		●	☼			IIII
9	●		●		☼		IIII
10	●	●	●		☼		IIII
11	●	●	●	☼			IIII

☼ = Led 灯闪烁
● = Led 灯亮
S = 按秒计时
IIII = 燃烧器启动周期结束

D962

状态面板
为根据需要订购的配件
见第 2 页。

组装
燃烧器已为安装“ 状态面板” 预留了位置，安装步骤如下：
- 用连接线 2) 将“ 状态面板” 1) 安装到支架 3) 上。
- 使用随此组件附带的螺丝 4) 将“ 状态面板” 固定在支架上。

此“ **状态面板**” 具有以下三个功能：

1 - 显示燃烧器运行小时数和点火次数
总的运行小时数
按按钮 "h1"
2 段火运行小时数
按按钮 "h2"
1 段火运行小时数
总的小时数 - 2 段火运行小时数
点火次数
按按钮 "count"
复位运行小时数和点火次数
同时按下三个 “reset” 按钮。
非易失性内存
即使出现断电情况，运行小时数和点火次数仍会储存在内存内。

2 - 显示和点火阶段相关时间：
led 指示灯以下列顺序亮起，见图 A：

远程控制装置 TR 闭合：
1 - 燃烧器停机 , TL 断开
2 - 控制装置 TL 闭合
3 - 马达启动：
计时器启动计时
4 - 燃烧器点火
5 - 2 段火电磁阀通电
停止计时
6 - 第5阶段后10秒 ,代码IIII将出现在读数面板上：这显示启动周期结束。

控制装置 TR 断开：
1 - 燃烧器停机 , TL 断开
2 - 控制装置 TL 闭合
3 - 马达启动：
计时开始
4 - 燃烧器点火
7 - 第 4 阶段后 30 秒：
停止计时
8 - 第7阶段后10秒 ,代码IIII将出现在读数面板上：这显示启动周期结束。

读数面板 V 上显示的次数、秒数可指示第 16 页上所述之启动周期中不同阶段的次序。

3 - 如果燃烧器出现故障，“ 状态显示面板” 会显示故障发生的确切时间。
led 灯亮起，有 11 种可能性，见图 (B)。
故障原因可查阅括号中的数字；数字对应第19页的图表中的条目。
1 .....(23)
2 .....(15 ÷ 22)
3 .....(21)
4 .....(1 ÷ 13, 31 ÷ 33, 35)
5 .....(21)
6 .....(31)
7 .....(21)
8 .....(31 ÷ 33)
9 .....(31 ÷ 33)
10 .....(21)
11 .....(21)

符号说明：

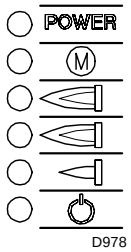

= 电源显示
= 风机马达锁定 (红色)
= 燃烧器锁定 (红色)
= 2 段火运行
= 1 段火运行
= 达到负荷 (备用状态)
led：灯亮

配件（可选）:

抗电磁干扰组件

如果由于附近有变频器，使燃烧器受到电磁干扰（电磁信号强度大于 10 V/m），或温控器的连接线长度超过 20 米时，需要在电气控制与燃烧器之间安装电磁干扰防护装置。

燃烧器	**RS 70 - RS 100 - RS 130**
代码	3010386

- **加长燃烧头**

燃烧器	**RS 70**	**RS 100**	**RS 130**
代码	3010117	3010118	3010119

- **LPG 运行组件：** RS 70-100-130 型燃烧器安装此组件后可运行 LPG

燃烧器	**RS 70**		**RS 100**		**RS 130**	
出力 kW	242 ÷ 814		349 ÷ 1163		466 ÷ 1512	
燃烧筒长度 mm	250	385	250	385	280	415
代码	3010097	3010098	3010099	3010100	3010101	3010102

- **减震器**

燃烧器	**RS 70**		**RS 100**		**RS 130**	
出力 kW	192 ÷ 814		232 ÷ 1163		185 ÷ 1461	
燃烧筒长度 mm	250	385	250	385	280	415
代码	3010201		3010202		3010373	3010374

- **接地故障断路器：**代码 **3010329**
- **状态面板**（见页 20）：代码 **3010322**
- **符合 EN 676 标准的燃气阀组（带阀门、调压器和过滤器）**：见页 8。

重要提示：本手册未列明之任何其它附加安全设备由安装方负责。

Registered Office - 公司注册所在地 :
RIELLO S.p.A.
I-37045 Legnago (VR)
Tel.: +39.0442.630111
http:// www.riello.it
http:// www.rielloburners.com

Manufacturing site:
Riello Heating Equipment (Shanghai) CO., LTD
No. 388, Jinbai Road - Jinshan Industrial Zone
201506 - Shanghai
CHINA

生产场所 :
Riello Heating Equipment (Shanghai) CO., LTD
利雅路热能设备 (上海) 有限公司
上海市金山工业区金百路 388 号